9-2350-300-20-2

TM 9-2350-300-20-2

This copy is a reprint which includes current pages from Changes 1 through 3.

TECHNICAL MANUAL

ORGANIZATIONAL MAINTENANCE MANUAL FOR

GUN, AIR DEFENSE ARTILLERY, SELF-PROPELLED: 20-MM, M163A1 CANNON M168, MOUNT M157A1, SIGHT M61, AND RADAR AN/VPS-2 (NSN 2350-01-017-2113)

General Electric Company
Contract No. DAAA09-76-C-2002

This manual supersedes TM 9-2350-300-20-2, 7 April 1971, including changes.

NOTE:
Retain TM 9-2350-300-20-2, 7 April 1971, for use until conversion of M163 to M163A1 configuration has been accomplished.

MARCH 1977

D 101.11:

best copy available

CHANGE NO. 3

TM 9-2350-300-20-2
C3

HEADQUARTERS,
DEPARTMENT OF THE ARMY
Washington, DC., 6 December 1988

Organizational Maintenance Manual

for

**GUN, AIR DEFENSE ARTILLERY, SELF-PROPELLED:
20-MM, M163A1
CANNON M168, MOUNT M157A1, SIGHT M61,
AND RADAR AN/VPS-2
(NSN 2350-01-017-2113)**

TM 9-2350-300-20-2, 31 March 1977, is changed as follows:

1. Remove old pages and insert new pages as indicated below.
2. New or changed material is indicated by a vertical bar in the margin of the page.
3. Revised illustrations are indicated by a vertical bar after the schematic figure title and by shaded lines in the affected areas.

Remove pages	Insert Pages
i and ii	i and ii
1-11/(1-12 blank)	1-11/(1-12 blank)
1-15/(1-16 blank)	1-15/(1-16 blank)
1-17/(1-18 blank)	1-17/(1-18 blank)
1-99/(1-100 blank)	1-99/(1-100 blank)
1-107 thru 1-109/(1-110 blank)	1-107 thru 1-110
1-111 and 1-112	1-111 and 1-112
1-113 and 1-114	1-113/(1-114 blank)
None	1-114.1/(1-114.2)
None	1-114.3/(1-114.4 blank)
1-117/(1-118 blank)	1-117/(1-118 blank)
1-125/(1-126 blank)	1-125/(1-126 blank)
1-195/(1-196 blank)	1-195/(1-196 blank)
1-201/(1-202 blank)	1-201/(1-202 blank)

4. File this change in front of this publication for reference purposes

By Order of the Secretary of the Army:

CARL E. VUONO
General, United States Army
Chief of Staff

Official:

WILLIAM J. MEEHAN II
Brigadier General, United States Army
The Adjutant General

DISTRIBUTION:

To be distributed in accordance DA Form 12-37, Unit Maintenance Requirements for Gun, Air Defense, 20-MM, S-P, M163, M163A1.

TM 9-2350-300-20-2
C2

CHANGE NO. 2

HEADQUARTERS,
DEPARTMENT OF THE ARMY
Washington, D.C., 6 August 1985

Organizational Maintenance Manual

for

**GUN, AIR DEFENSE ARTILLERY, SELF-PROPELLED:
20-MM, M163A1
CANNON M168, MOUNT M157A1, SIGHT M61,
AND RADAR AN/VPS-2
(NSN 2350-01-017-2113)**

TM 9-2350-300-20-2, 31 March 1977, is changed as follows:

1. Remove old pages and insert new pages as indicated below.
2. New or changed material is indicated by a vertical bar in the margin of the page.
3. Revised illustrations are indicated by a vertical bar adjacent to the illustration identification number, and shaded lines in the affected areas. Added illustrations are indicated by shaded lines around the entire new figure.

Remove pages	Insert Pages
A/(B blank)	None
i and ii	i and ii
1-3/(1-4 blank) through 1-7/(1-8 blank)	1-3/(1-4 blank) through 1-7/(1-8 blank)
1-11/(1-12 blank) through 1-13/(1-14 blank)	1-11/(1-12 blank) through 1-13/(1-14 blank)
1-17/(1-18 blank)	1-17/(1-18 blank)
1-21/(1-22 blank) through 1-35/(1-36 blank)	1-21/(1-22 blank) through 1-35/(1-36 blank)
1-39/(1-40 blank) through 1-43/(1-44 blank)	1-39/(1-40 blank) through 1-43/(1-44 blank)
1-49/(1-50 blank)	1-49/(1-50 blank)
1-55/(1-56 blank)	1-55/(1-56 blank)
1-63/(1-64 blank) through 1-65/(1-66 blank)	1-63/(1-64 blank through 1-65/(1-66 blank)
1-69/(1-70 blank) through 1-71/(1-72 blank)	1-69/(1-70 blank) through 1-71/(1-72 blank)
1-81 through 1-83/(1-84 blank)	1-81 through 1-83/(1-84 blank)
1-91/(1-92 blank)	1-91/(1-92 blank)
1-95/(1-96 blank)	1-95/(1-96 blank)
1-101/(1-102 blank) through 1-105/(1-106 blank)	1-101/(1-102 blank) through 1-105/(1-106 blank)
1-111 through 1-114	1-111 through 1-114
1-119/(1-120 blank) through 1-121/(1-122 blank)	1-119/(1-120 blank) through 1-121/(1-122 blank)
1-125/(1-126 blank) through 1-129/(1-130 blank)	1-125/(1-126 blank) through 1-129/(1-130 blank)
1-137/(1-138 blank)	1-137/(1-138 blank)
1-141/(1-142 blank) through 1-143/(1-144 blank)	1-141/(1-142 blank) through 1-143/(1-144 blank)
1-147/(1-148 blank) through 1-149/(1-150 blank)	1-147/(1-148 blank) through 1-149/(1-150 blank)
1-159/(1-160 blank) through 1-167/(1-168 blank)	1-159/(1-160 blank) through 1-167/(1-168 blank)
1-175/(1-176 blank)	1-175/(1-176 blank)
1-179/(1-180 blank) through 1-181/(1-182 blank)	1-179/(1-180 blank) through 1-181/(1-182 blank)
1-187/(1-188 blank) through 1-201/(1-202 blank)	1-187/(1-188 blank) through 1-201/(1-202 blank)

4. File this change sheet in front of this publication for reference purposes.

By Order of the Secretary of the Army:

JOHN A. WICKHAM, JR.
General, United States Army
Chief of Staff

Official:

DONALD J. DELANDRO
Brigadier General, United States Army
The Adjutant General

DISTRIBUTION:
To be distributed in accordance with DA Form 12-37, Organizational Maintenance requirements for Gun, Air Defense, 20-MM, Self-Propelled M163, M163A1.

TM 9-2350-300-20-2
C-1

CHANGE
No 1.

HEADQUARTERS
DEPARTMENT OF THE ARMY
WASHINGTON, DC, *18 April 1983*

Organizational Maintenance Manual
for

GUN, AIR DEFENSE ARTILLERY, SELF-PROPELLED:
20-MM, M163A1
CANNON M168, MOUNT M157A1
AND SIGHT M61 AND RADAR AN/VPS-2
NSN 2350-01-017-2113

TM 9-2350-300-20-2, 31 March 1977, is changed as follows:

1. Remove old pages and insert new pages as indicated below. Added or revised illustrations are indicated by a vertical bar adjacent to the illustration identification number, and shaded lines in the affected areas.

Remove Pages	*Insert Pages*
A/ (B blank)	*A/(B blank)*
1-51/(1-52 blank)	*1-51/(1-52 blank)*
1-131/(1-132 blank)	*1-131/(1-132 blank)*
1-153/(1-154 blank)	*1-153/(1-154 blank)*
1-177/(1-178 blank)	*1-177/(1-178 blank)*

2. File this change sheet in front of the publication for reference purposes.

By Order of the Secretary of the Army:

E. C. MEYER
General, United States Army
Chief of Staff

Official:

ROBERT M. JOYCE
Major General, United States Army
The Adjutant General

DISTRIBUTION:

To be distributed in accordance with DA Form 12-37, Organizational Maintenance requirements for Gun, 20mm, XM163.

Reproduction for non-military use of the information or illustrations contained in this publication is not permitted. The policy for military use reproduction is established for the Army in AR 380-5, for the Navy and Marine Corps in OPNAVINST 5510.1B, nd for the Air Force in Air Force Regulation 205-1.

LIST OF EFFECTIVE PAGES

Insert latest changed pages; dispose of superseded pages in accordance with applicable regulations.

NOTE: On a changed page, the portion of the text affected by the latest change is indicated by a vertical line, or other change symbol, in the outer margin of the page. Changes to wiring diagrams are indicated by shaded areas.

Total number of pages in this manual is 206 consisting of the following:

Page No.	# Change No.
Title	0
A	1
i – ii	0
1-1	0
1-2 blank	0
1-3	0
1-4 blank	0
1-5	0
1-6 blank	0
1-7	0
1-8 blank	0
1-9	0
1-10 blank	0
1-11	0
1-12 blank	0
1-13	0
1-14 blank	0
1-15	0
1-16 blank	0
1-17	0
1-18 blank	0
1-19	0
1-20 blank	0
1-21	0
1-22 blank	0
1-23	0
1-24 blank	0
1-25	0
1-26 blank	0
1-27	0
1-28 blank	0
1-29	0
1-30 blank	0
1-31	0
1-32 blank	0
1-33	0
1-34 blank	0
1-35	0
1-36 blank	0
1-37	0
1-38 blank	0
1-39	0
1-40 blank	0
1-41	0
1-42 blank	0
1-43	0
1-44 blank	0
1-45	0
1-46 blank	0
1-47	0
1-48 blank	0
1-49	0
1-50 blank	0
1-51	1
1-52 blank	0
1-53	0
1-54 blank	0
1-55	0
1-56 blank	0
1-57	0
1-58 blank	0
1-59	0
1-60 blank	0
1-61	0
1-62 blank	0
1-63	0
1-64 blank	0
1-65	0
1-66 blank	0
1-67	0
1-68 blank	0
1-69	0
1-70 blank	0
1-71	0
1-72 blank	0
1-73	0
1-74 blank	0
1-75 – 1-82	0
1-83	0
1-84 blank	0
1-85	0
1-86 blank	0
1-87	0
1-88 blank	0
1-89	0
1-90 blank	0
1-91	0
1-92 blank	0
1-93	0
1-94 blank	0
1-95	0
1-96 blank	0
1-97	0
1-98 blank	0
1-99	0
1-100 blank	0
1-101	0
1-102 blank	0
1-103	0
1-104 blank	0
1-105	0
1-106 blank	0
1-107 – 1-108	0
1-109	0
1-110 blank	0
1-111 – 1-114	0
1-115	0
1-116 blank	0
1-117	0
1-118 blank	0
1-119	0
1-120 blank	0
1-121	0
1-122 blank	0
1-123	0
1-124 blank	0
1-125	0
1-126 blank	0
1-127	0
1-128 blank	0
1-129	0
1-130 blank	0
1-131	1
1-132 blank	0
1-133	0
1-134 blank	0
1-135	0
1-136 blank	0
1-137	0
1-138 blank	0
1-139	0
1-140 blank	0
1-141	0
1-142 blank	0
1-143	0
1-144 blank	0
1-145	0
1-146 blank	0
1-147	0
1-148 blank	0
1-149	0
1-150 blank	0
1-151	0
1-152 blank	0
1-153	1
1-154 blank	0
1-155	0
1-156 blank	0
1-157	0
1-158 blank	0
1-159	0
1-160 blank	0
1-161	0
1-162 blank	0
1-163	0
1-164 blank	0
1-165	0
1-166 blank	0
1-167	0
1-168 blank	0
1-169	0
1-170 blank	0
1-171	0
1-172 blank	0
1-173	0
1-174 blank	0
1-175	0
1-176 blank	0
1-177	1
1-178 blank	0
1-179	0
1-180 blank	0
1-181	0
1-182 blank	0
1-183	0
1-184 blank	0
1-185	0
1-186 blank	0
1-187	0
1-188 blank	0
1-189	0
1-190 blank	0
1-191	0
1-192 blank	0
1-193	0
1-194 blank	0
1-195	0
1-196 blank	0
1-197	0
1-198 blank	0
1-199	0
1-200 blank	0
1-201	0
1-202 blank	0

Zero in this column indicates an original page.

Technical Manual

TM 9-2350-300-20-2

HEADQUARTERS,
DEPARTMENT OF THE ARMY
Washington, D.C., 31 March 1977

Organizational Maintenance Manual
for

GUN, AIR DEFENSE ARTILLERY, SELF-PROPELLED:

20-MM, M163A1

CANNON M168, MOUNT M157A1, SIGHT M61,

AND RADAR AN/VPS-2

(NSN 2350-01-017-2113)

REPORTING OF ERRORS

You can improve this manual by recommending improvements using DA Form 2028 (Recommended Changes to Publications and Blank Forms) or DA Form 2028-2 located in back of the manual and mailing the form direct to Commander, US Army Armament, Munitions and Chemical Command, Attn: AMSMC-MAS, Rock Island, IL 61299-6000. A reply will be furnished directly to you.

NOTE

This manual consists of two volumes: TM 9-2350-300-20-1 and TM 9-2350-300-20-2. This volume contains all applicable functional schematics and wiring diagrams. All other material is contained in TM 9-2350-300-20-1.

* This manual supersedes TM 9-2350-300-20-2, 7 April 1971, including all changes.

LIST OF SCHEMATICS

Number	Title	Page
S-1	M163A1 system overall simplified block diagram	1-1
S-2	Cannon control and firing circuits schematic diagram	1-3
S-3	Cannon control and firing circuits functional diagram	1-5
S-4	Gun clearing circuits functional diagram	1-7
S-5	Mount system block diagram	1-9
S-6	Mount elevation control functional diagram	1-11
S-7	Mount azimuth control functional diagram	1-13
S-8	Mount hatch protection circuit diagram (sheet 1 of 2)	1-15
S-8	Mount hatch protection circuit diagram (sheet 2 of 2)	1-17
S-9	Sight magnet current circuits simplified block diagram	1-19
S-10	Sight magnet current circuits functional diagram	1-21
S-11	Sight torque current circuits simplified block diagram	1-23
S-12	Sight torque current circuits functional diagram	1-25
S-13	Ten-second time delay circuit functional diagram	1-27
S-14	Acquisition time delay circuit functional diagram	1-29
S-15	Ready-to-fire circuit functional diagram	1-31
S-16	External range control circuit functional diagram	1-33
S-17	Mode scaling functional diagram	1-35
S-18	Electronic countermeasure detection circuit functional diagram	1-37
S-19	Self test circuit functional diagram	1-39
S-20	Low voltage protection circuit functional diagram	1-41
S-21	Radar set AN/VPS-2 functional block diagram	1-43
S-22	Synchronizing system functional block diagram	1-43
S-23	Synchronizing system timing diagram	1-45
S-24	Transmitting system functional block diagram	1-47
S-25	RF system functional block diagram	1-49
S-26	Receiving system functional block diagram	1-51
S-27	Sum and difference gate signals waveform diagram	1-53
S-28	Output of sum and difference gates waveform diagram	1-53
S-29	Ranging system functional block diagram (sheet 1 of 2)	1-55
S-29	Ranging system functional block diagram (sheet 2 of 2)	1-57
S-30	Elevation servo drive functional block diagram	1-59
S-31	Traverse servo drive functional block diagram	1-61
S-32	Radar power system functional block diagram	1-63
S-33	Radar configuration for clutter lock-on functional block diagram	1-65
S-34	Radar configuration for midrange calibration functional block diagram	1-65
S-35	Sight mechanism diagram	1-67
S-36	Sight and radar interface functional diagram	1-69
S-37	Battery charging circuit functional diagram	1-71
S-38	System simplified interconnection diagram	1-73
S-39	Detailed interconnection diagram (sheet 1 of 20)	1-75
S-39	Detailed interconnection diagram (sheet 2 of 20)	1-76
S-39	Detailed interconnection diagram (sheet 3 of 20)	1-77
S-39	Detailed interconnection diagram (sheet 4 of 20)	1-78
S-39	Detailed interconnection diagram (sheet 5 of 20)	1-79
S-39	Detailed interconnection diagram (sheet 6 of 20)	1-80

LIST OF SCHEMATICS (Continued)

Number	Title	Page
S-39	Detailed interconnection diagram (sheet 7 of 20)	1-81
S-39	Detailed interconnection diagram (sheet 8 of 20)	1-82
S-39	Detailed interconnection diagram (sheet 9 of 20)	1-83
S-39	Detailed interconnection diagram (sheet 10 of 20)	1-85
S-39	Detailed interconnection diagram (sheet 11 of 20)	1-87
S-39	Detailed interconnection diagram (sheet 12 of 20)	1-89
S-39	Detailed interconnection diagram (sheet 13 of 20)	1-91
S-39	Detailed interconnection diagram (sheet 14 of 20)	1-93
S-39	Detailed interconnection diagram (sheet 15 of 20)	1-95
S-39	Detailed interconnection diagram (sheet 16 of 20)	1-97
S-39	Detailed interconnection diagram (sheet 17 of 20)	1-99
S-39	Detailed interconnection diagram (sheet 18 of 20)	1-101
S-39	Detailed interconnection diagram (sheet 19 of 20)	1-103
S-39	Detailed interconnection diagram (sheet 20 of 20)	1-105
S-40	Cable assembly W1 wiring diagram	1-107
S-41	Cable assembly W2 wiring diagram	1-107
S-42	Cable assembly W3 wiring diagram	1-107
S-43	Cable assembly W4 wiring diagram	1-108
S-44	Cable assembly W5 wiring diagram	1-108
S-45	Cable assembly W6 and shorting connector wiring diagram	1-109
S-46	Cable assembly W7 wiring diagram	1-109
S-47	Cable assembly W8 wiring diagram	1-110
S-48	Cable assembly W9 wiring diagram	1-111
S-49	Cable assembly W10 wiring diagram	1-111
S-50	Cable assembly W11 wiring diagram	1-112
S-51	Cable assembly W12 wiring diagram	1-112
S-52	Cable assembly W13 wiring diagram	1-112
S-53	Cable assembly W14 wiring diagram	1-113
S-54	Cable assembly W17 wiring diagram	1-113
S-55	Cable assembly W101 wiring diagram	1-113
S-56	Cable assembly W102 wiring diagram	1-113
S-57	Cable assembly W103 wiring diagram	1-114.1
S-58	Cable assembly W104 wiring diagram	1-114.1
S-59	Cable assembly W105 wiring diagram	1-114.1
S-60	Cable assembly W106 wiring diagram	1-114.3
S-61	Cable assembly W107 wiring diagram	1-114.3
S-62	Cable assembly W108 wiring diagram	1-114.3
S-63	Cable routing (sheet 1 of 5)	1-115
S-63	Cable routing (sheet 2 of 5)	1-117
S-63	Cable routing (sheet 3 of 5)	1-119
S-63	Cable routing (sheet 4 of 5)	1-121
S-63	Cable routing (sheet 5 of 5)	1-123
S-64	Interface wiring diagram, M157A1 mount and M741 chassis	1-125
S-65	Slip ring assembly wiring diagram	1-125
S-66	Radar set AN/VPS-2 simplified functional schematic (sheet 1 of 4)	1-127
S-66	Radar set AN/VPS-2 simplified functional schematic (sheet 2 of 4)	1-129
S-66	Radar set AN/VPS-2 simplified functional schematic (sheet 3 of 4)	1-131

LIST OF SCHEMATICS (Continued)

Number	Title	Page
S-66	Radar set AN/VPS-2 simplified functional schematic (sheet 4 of 4)	1-133
S-67	Radar 6.5-volt and 5-volt power distribution functional schematic diagram (sheet 1 of 2)	1-135
S-67	Radar 6.5-volt and 5-volt power distribution functional schematic diagram (sheet 2 of 2)	1-137
S-68	Radar 23-volt and 15-volt power distribution functional schematic diagram (sheet 1 of 2)	1-139
S-68	Radar 23-volt and 15-volt power distribution functional schematic diagram (sheet 2 of 2)	1-141
S-69	Radar 24-volt power distribution functional schematic diagram (sheet 1 of 2)	1-143
S-69	Radar 24-volt power distribution functional schematic diagram (sheet 2 of 2)	1-145
S-70	Radar 28-volt power distribution functional schematic diagram (sheet 1 of 2)	1-147
S-70	Radar 28-volt power distribution functional schematic diagram (sheet 2 of 2)	1-149
S-71	Radar 33-volt and 25-volt power distribution functional schematic diagram (sheet 1 of 2)	1-151
S-71	Radar 33-volt and 25-volt power distribution functional schematic diagram (sheet 2 of 2)	1-153
S-72	Radar antenna positioning system functional schematic diagram (sheet 1 of 2)	1-155
S-72	Radar antenna positioning system functional schematic diagram (sheet 2 of 2)	1-157
S-73	Radar synchronizing system functional schematic diagram (sheet 1 of 2)	1-159
S-73	Radar synchronizing system functional schematic diagram (sheet 2 of 2)	1-161
S-74	Radar transmitting system functional schematic diagram (sheet 1 of 2)	1-163
S-74	Radar transmitting system functional schematic diagram (sheet 2 of 2)	1-165
S-75	RF system functional schematic diagram (sheet 1 of 2)	1-167
S-75	RF system functional schematic diagram (sheet 2 of 2)	1-169
S-76	Radar receiving system functional schematic diagram (sheet 1 of 4)	1-171
S-76	Radar receiving system functional schematic diagram (sheet 2 of 4)	1-173
S-76	Radar receiving system functional schematic diagram (sheet 3 of 4)	1-175
S-76	Radar receiving system functional schematic diagram (sheet 4 of 4)	1-177
S-77	Radar ranging system functional schematic diagram (sheet 1 of 6)	1-179
S-77	Radar ranging system functional schematic diagram (sheet 2 of 6)	1-181
S-77	Radar ranging system functional schematic diagram (sheet 3 of 6)	1-183
S-77	Radar ranging system functional schematic diagram (sheet 4 of 6)	1-185
S-77	Radar ranging system functional schematic diagram (sheet 5 of 6)	1-187
S-77	Radar ranging system functional schematic diagram (sheet 6 of 6)	1-189
S-78	M163A1 system electrical schematic diagram (sheet 1 of 5)	1-191
S-78	M163A1 system electrical schematic diagram (sheet 2 of 5)	1-193
S-78	M163A1 system electrical schematic diagram (sheet 3 of 5)	1-195
S-78	M163A1 system electrical schematic diagram (sheet 4 of 5)	1-197
S-78	M163A1 system electrical schematic diagram (sheet 5 of 5)	1-199
S-79	M163A1 interconnection schematic	1-201

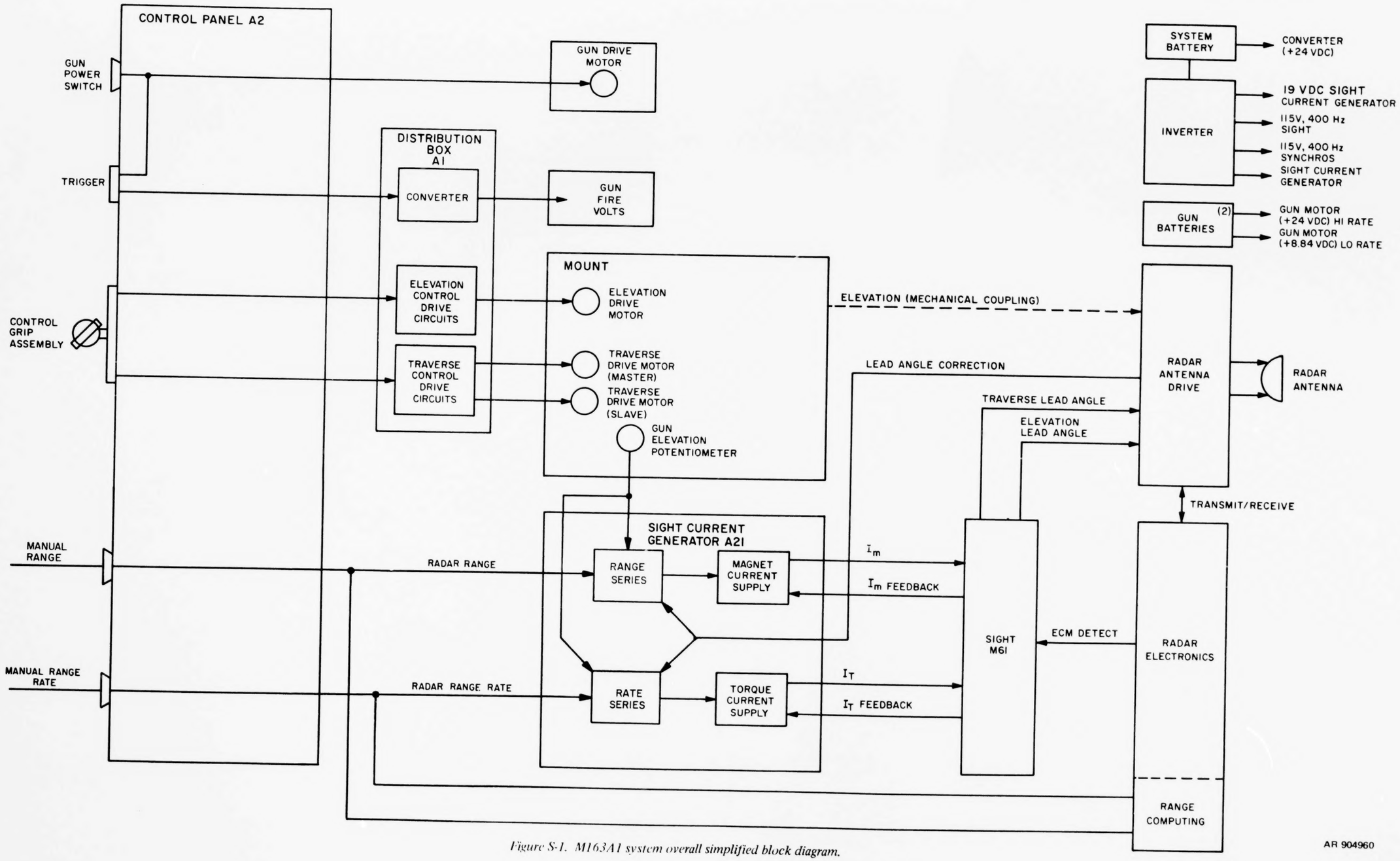

Figure S-1. M163A1 system overall simplified block diagram.

AR 904960

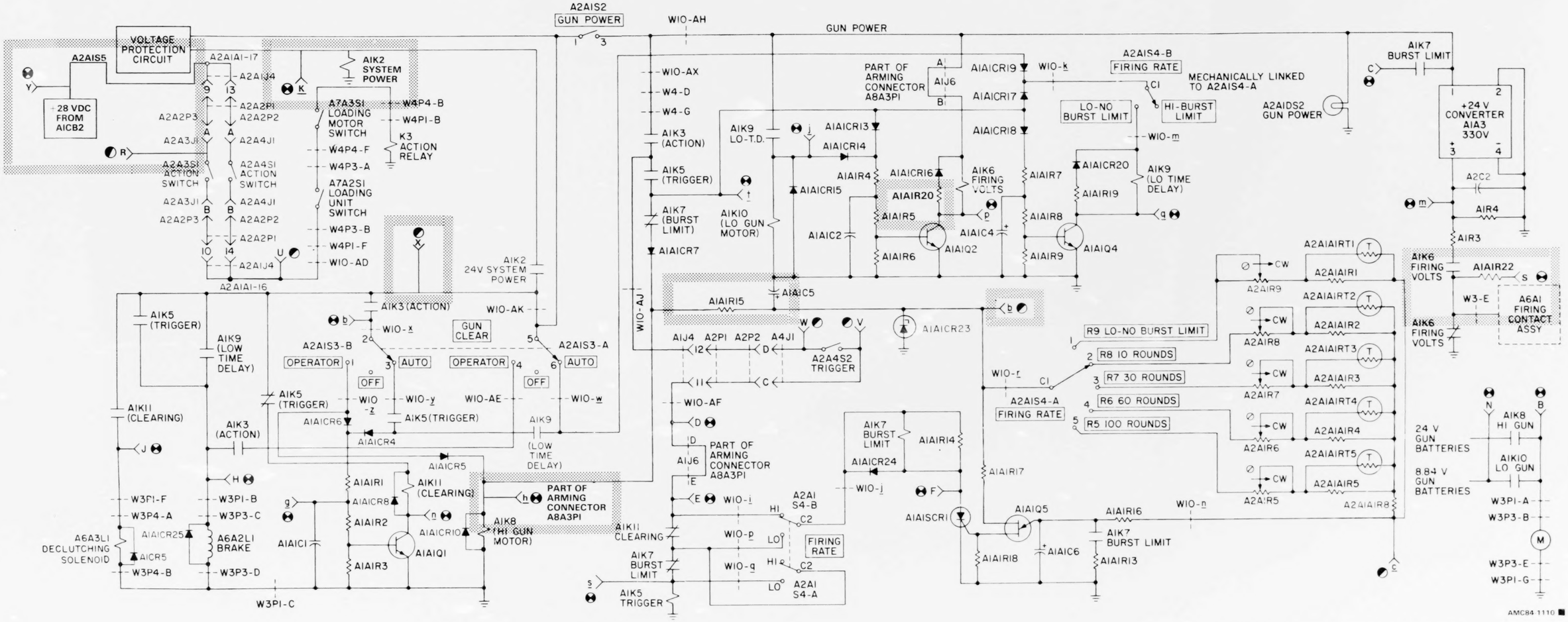

Figure 8-2. Cannon control and firing circuits schematic diagram.

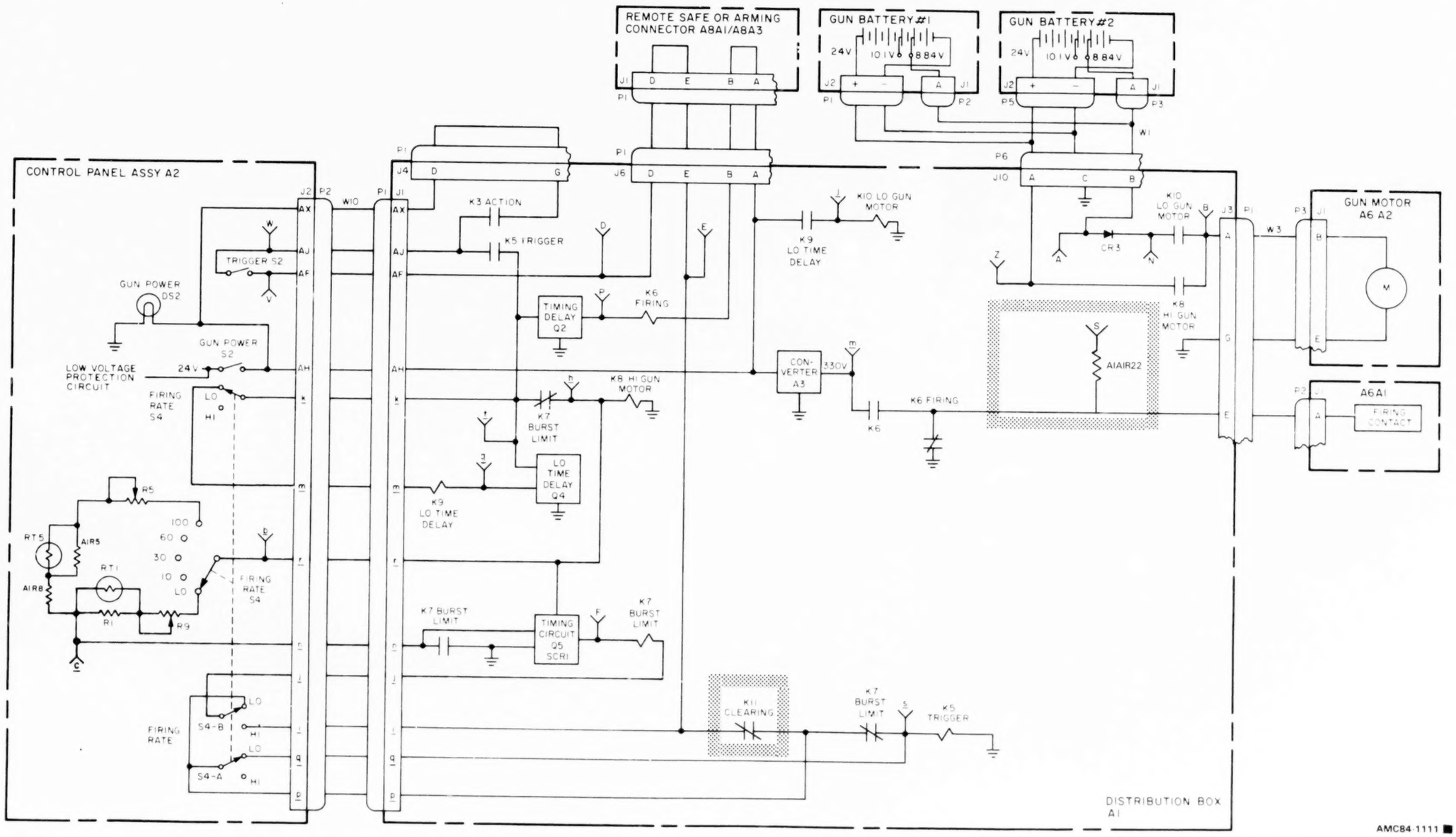

AMC84-1111

Figure S-3. Cannon control and firing circuits functional diagram.

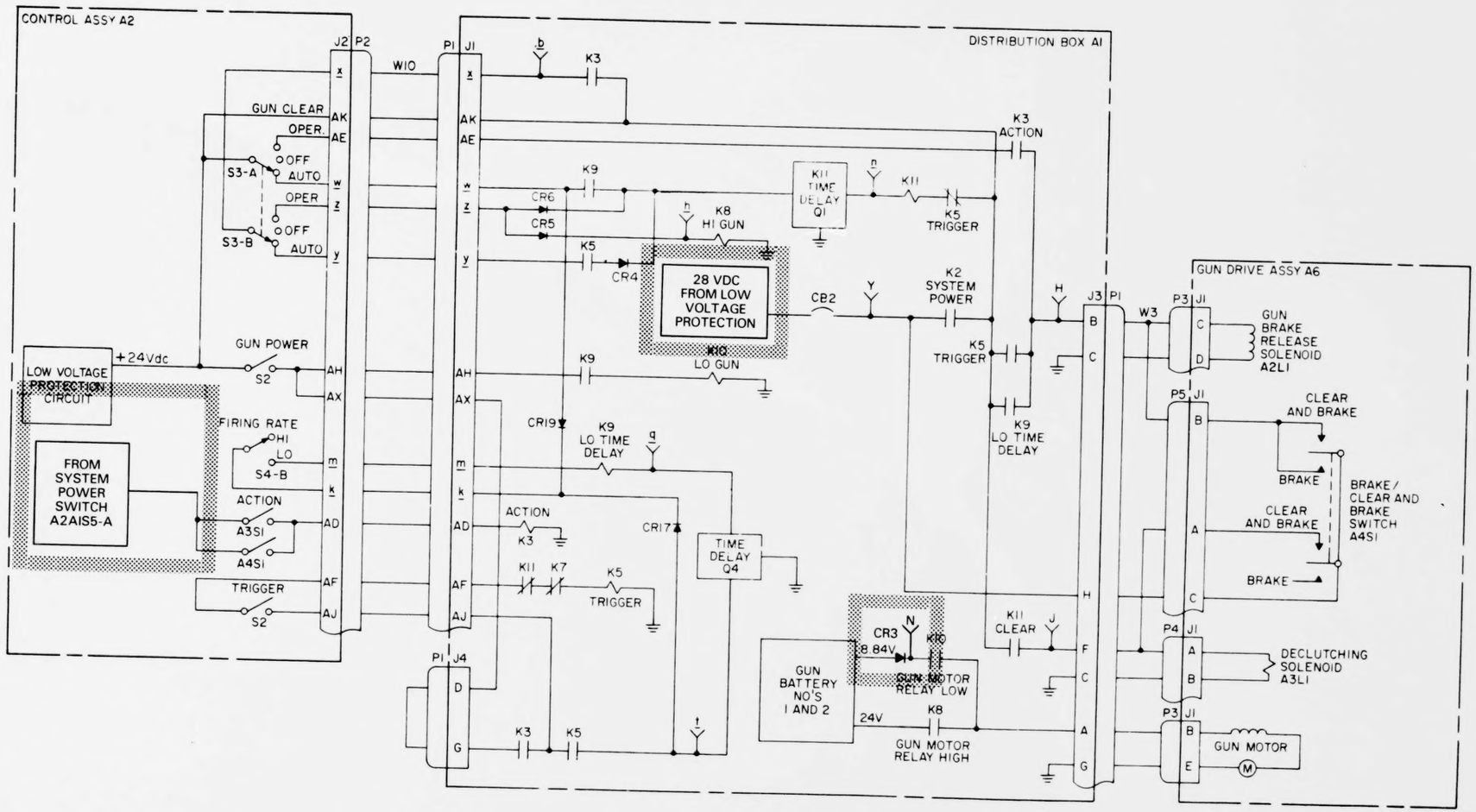

Figure 8-4. Gun clearing circuits functional diagram.

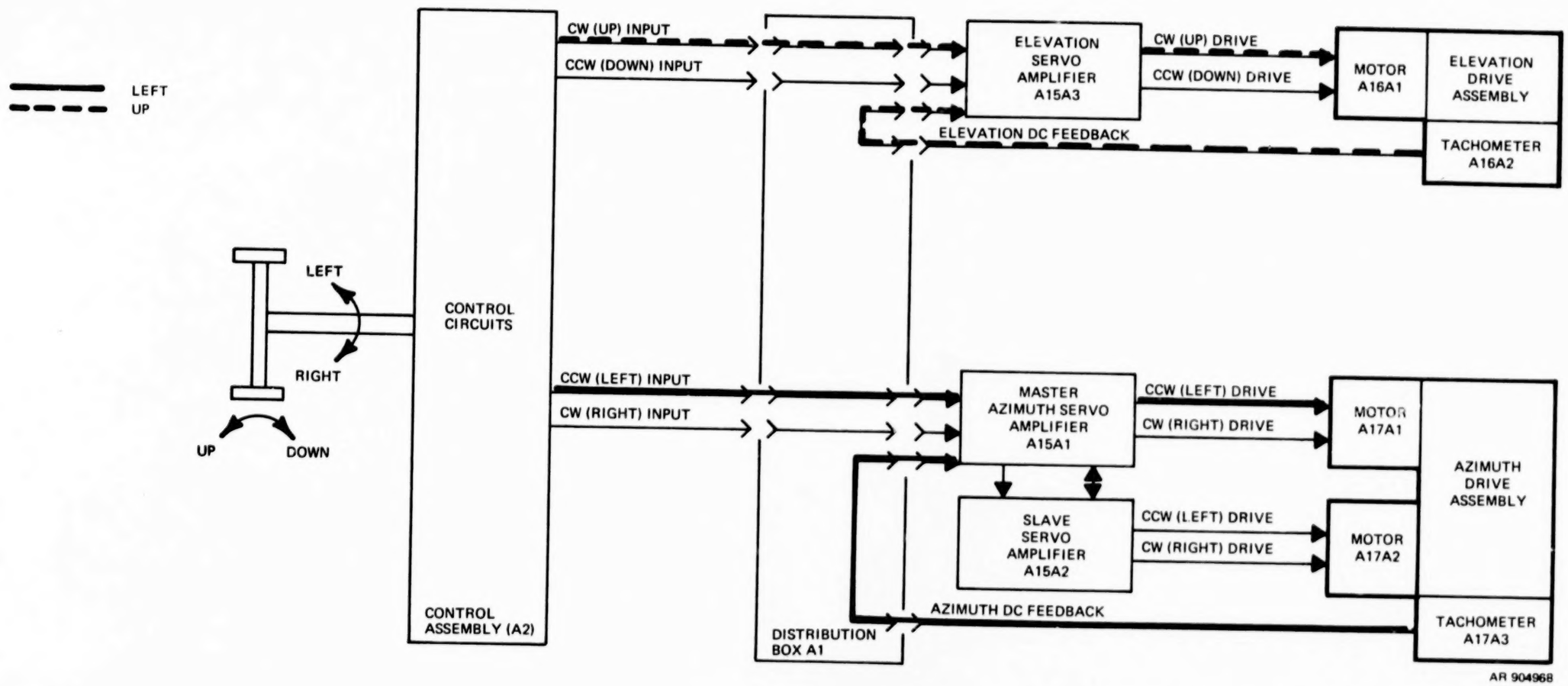

Figure S-5. Mount system block diagram.

NOTES:

1. ELEVATION LIMIT SWITCH A18 CONDITIONS:
   a. S1 ABOVE 18°
   b. S2 ABOVE 13°
   c. S3 ABOVE -5°
   d. S4 BELOW 80°
   e. S5 BELOW 80°

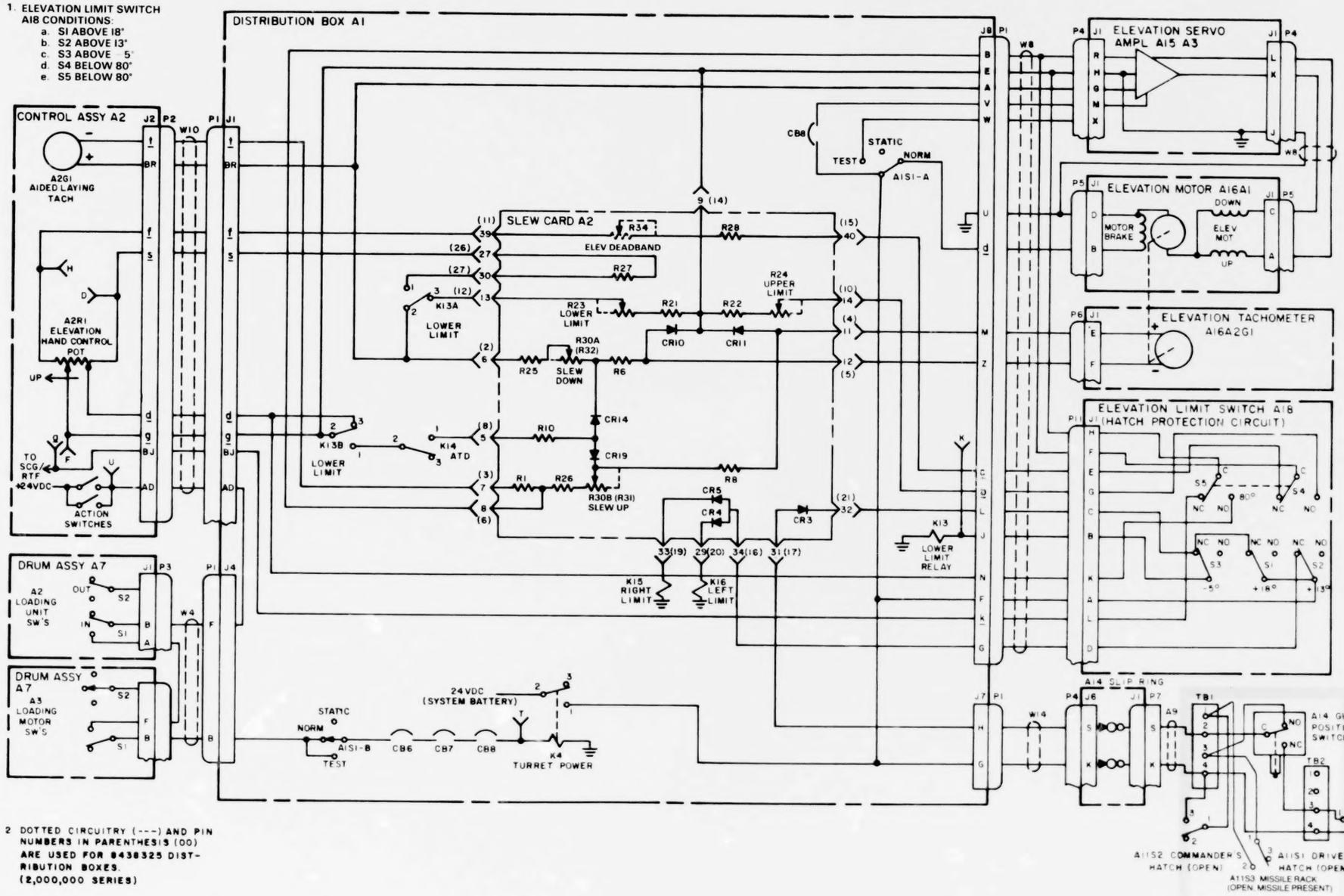

2 DOTTED CIRCUITRY (---) AND PIN NUMBERS IN PARENTHESIS (00) ARE USED FOR 8438325 DISTRIBUTION BOXES. (2,000,000 SERIES)

Figure 8-6. Mount elevation control functional diagram. ■

NOTES:

1. ELEVATION LIMIT SWITCH A18 CONDITIONS:
   a. S1 ABOVE 18°
   b. S2 ABOVE 13°
   c. S3 ABOVE −5°
   d. S4 BELOW 80°
   e. S5 BELOW 80°

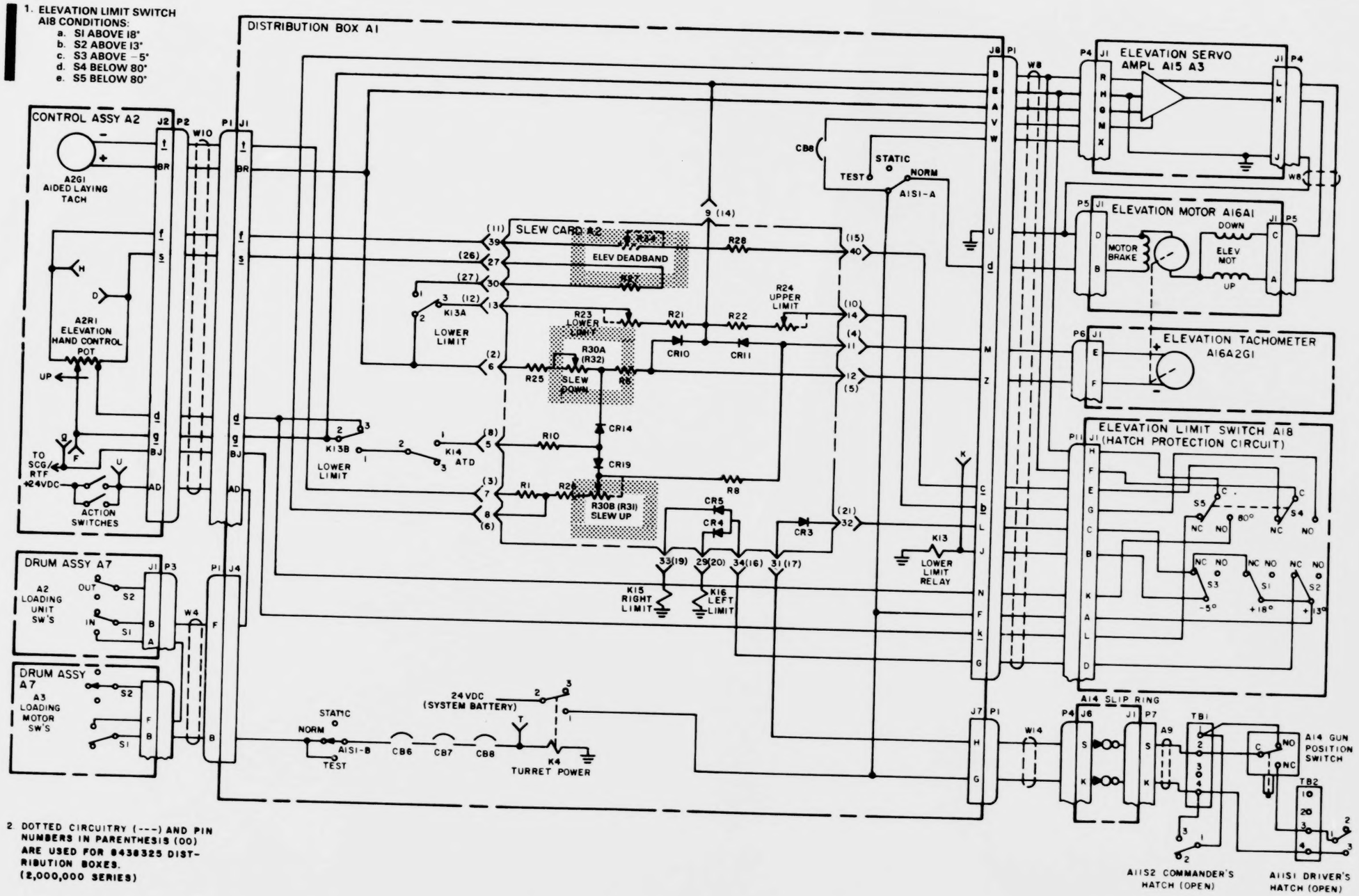

2. DOTTED CIRCUITRY (---) AND PIN NUMBERS IN PARENTHESIS (00) ARE USED FOR 8438325 DISTRIBUTION BOXES. (2,000,000 SERIES)

AMC84-1113

Figure S-6. Mount elevation control functional diagram

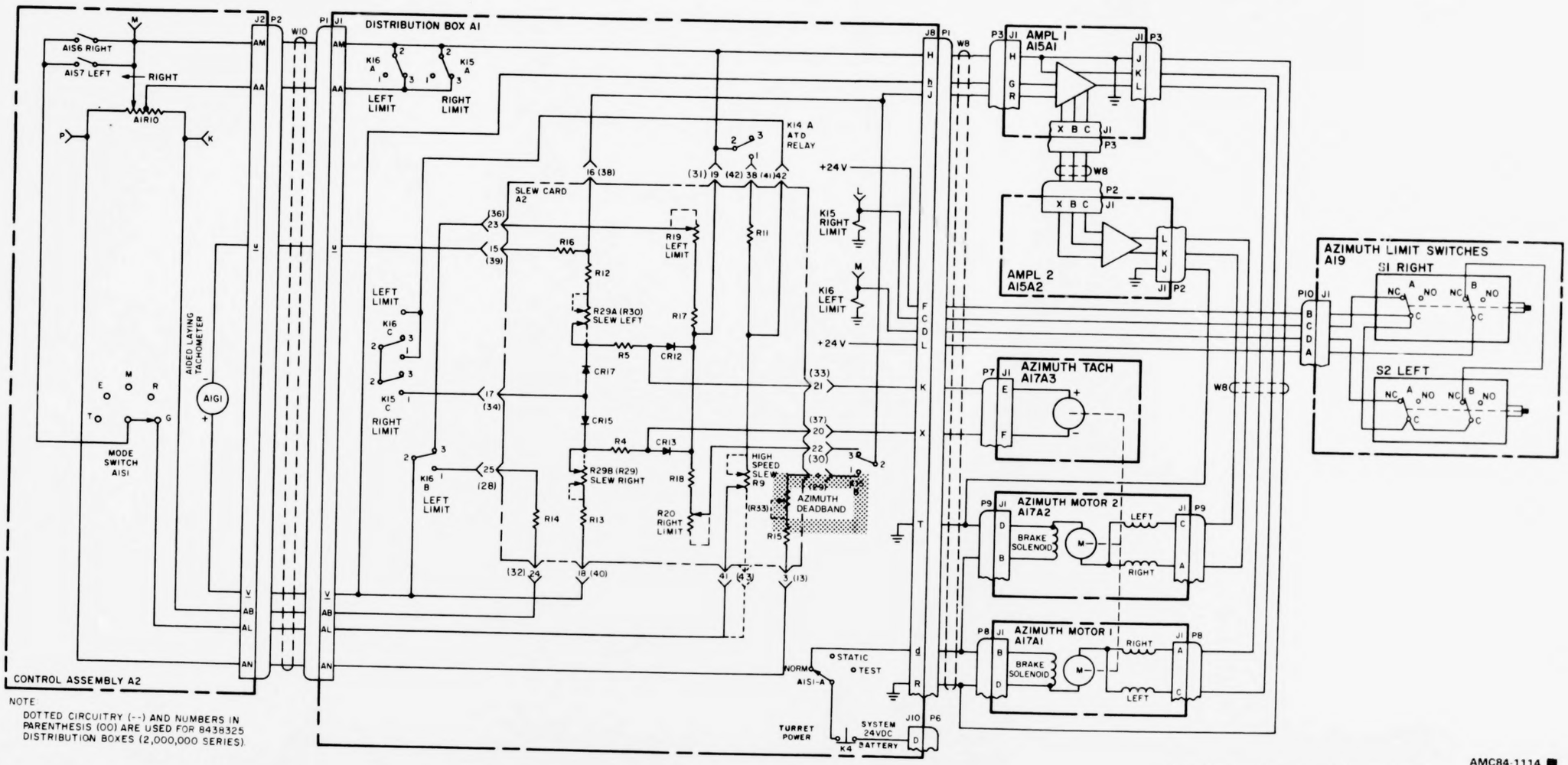

NOTE:
DOTTED CIRCUITRY (--) AND NUMBERS IN PARENTHESIS (00) ARE USED FOR 8438325 DISTRIBUTION BOXES (2,000,000 SERIES).

AMC84-1114

Figure S-7. Mount azimuth control functional diagram.

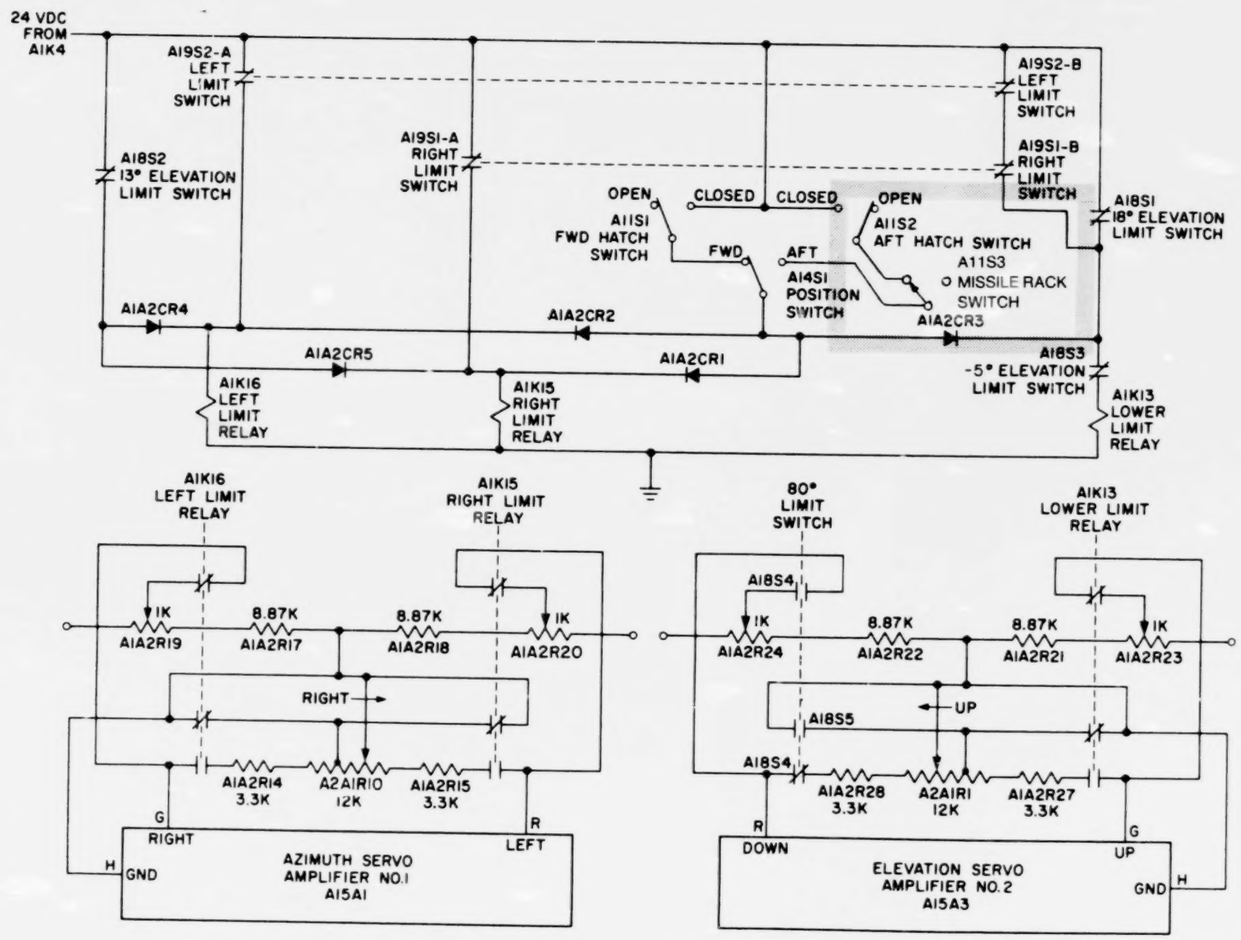

Figure S-8. Mount hatch protection circuit diagram (sheet 1 of 2). ■

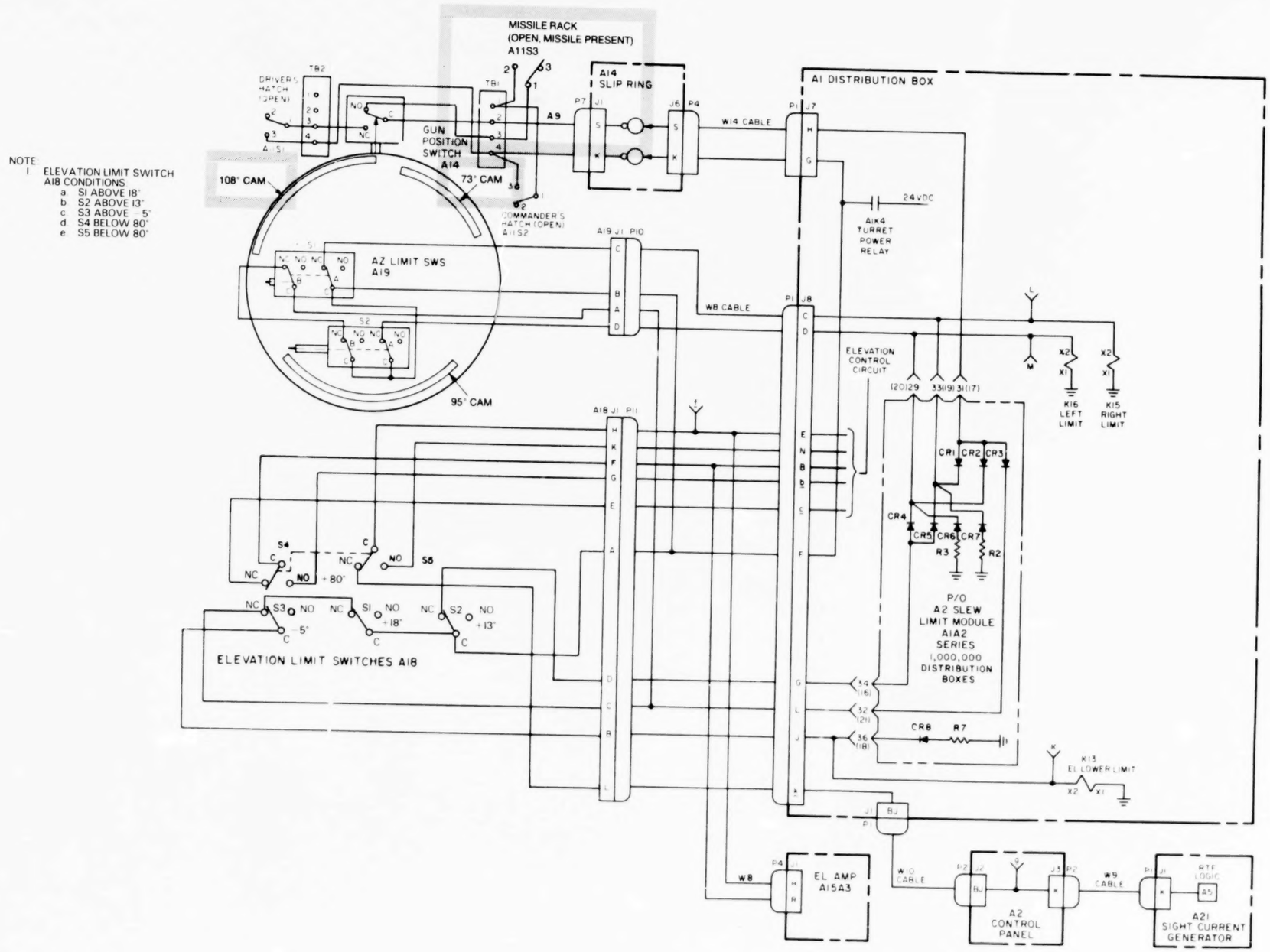

Figure S-8. Mount hatch protection circuit diagram (sheet 2 of 2). ■

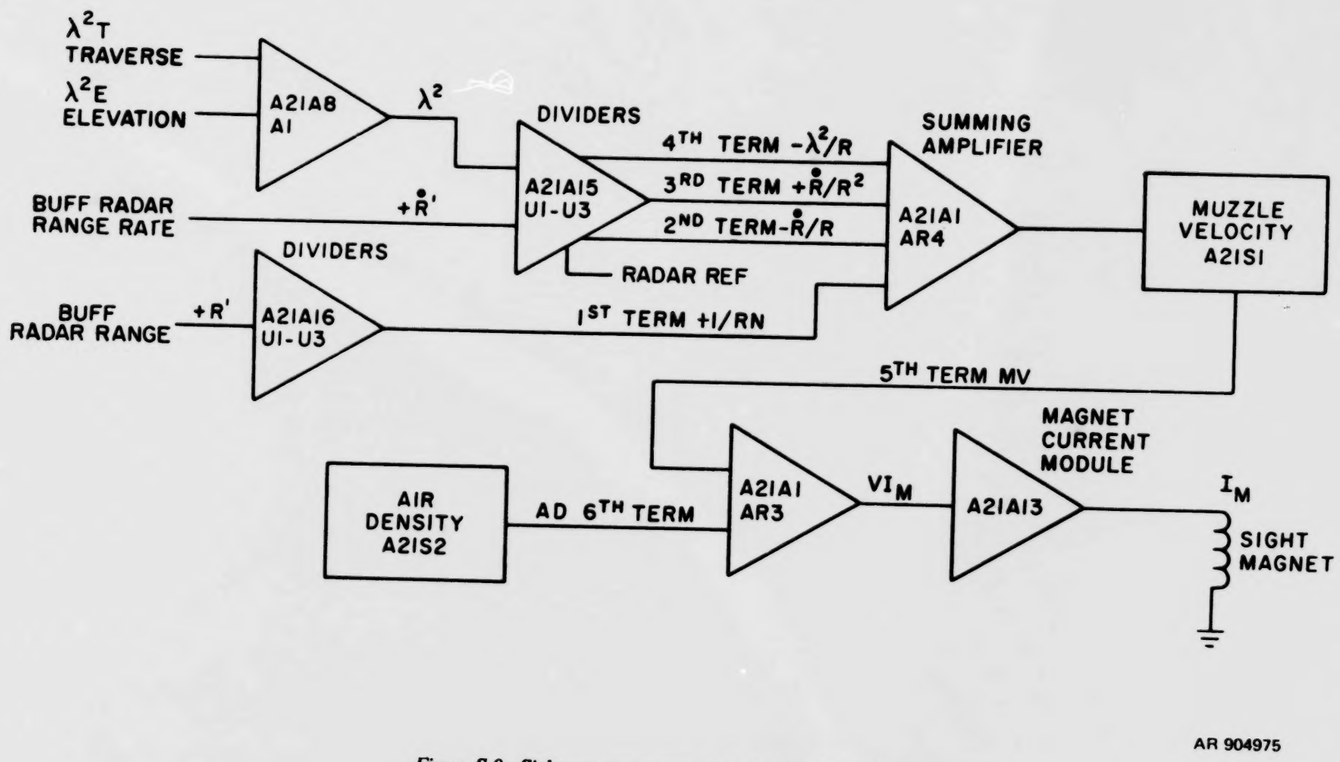

Figure S-9. Sight magnet current circuits simplified block diagram.

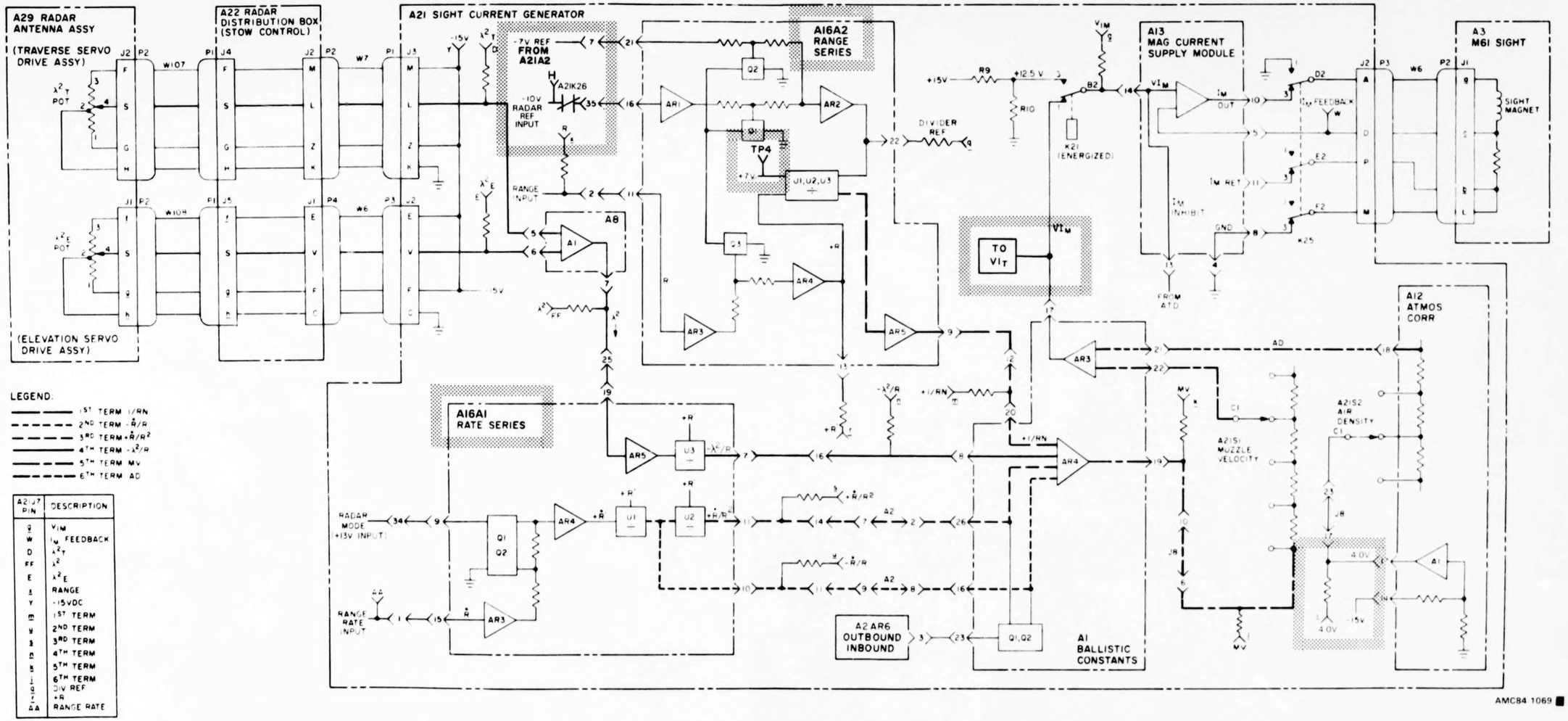

Figure 8-10. Sight magnet current circuits functional diagram

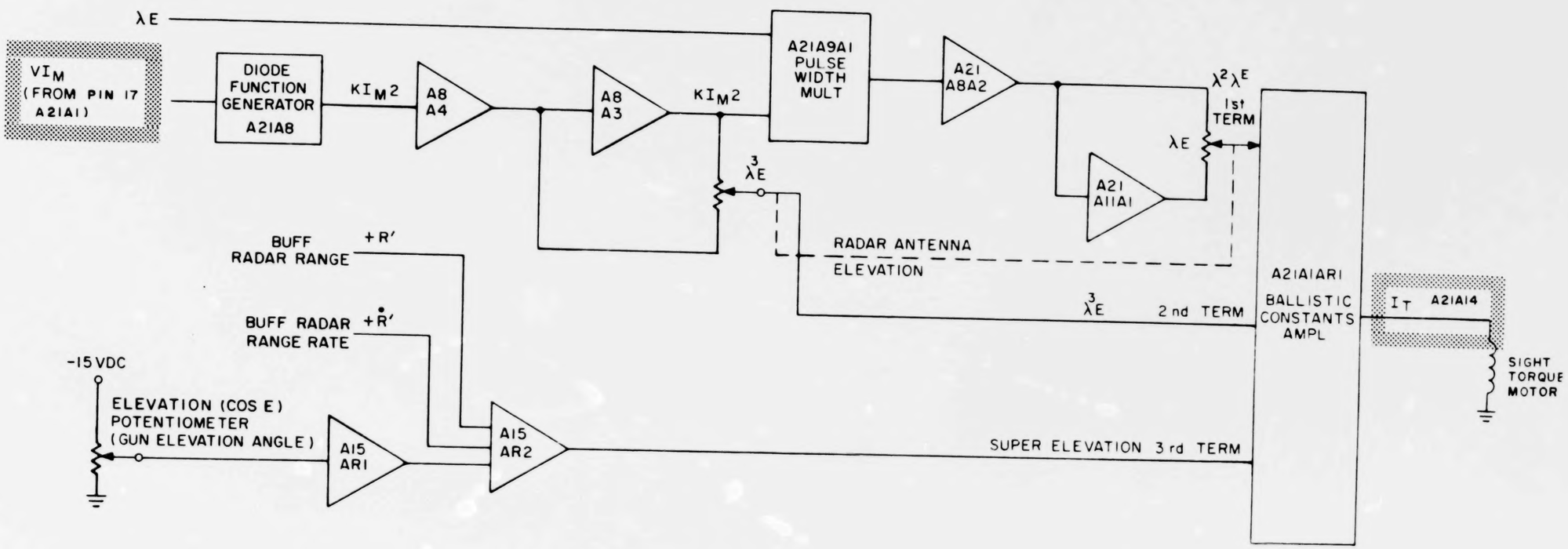

AMC84-1070

Figure S-11. Sight torque current circuits simplified block diagram.

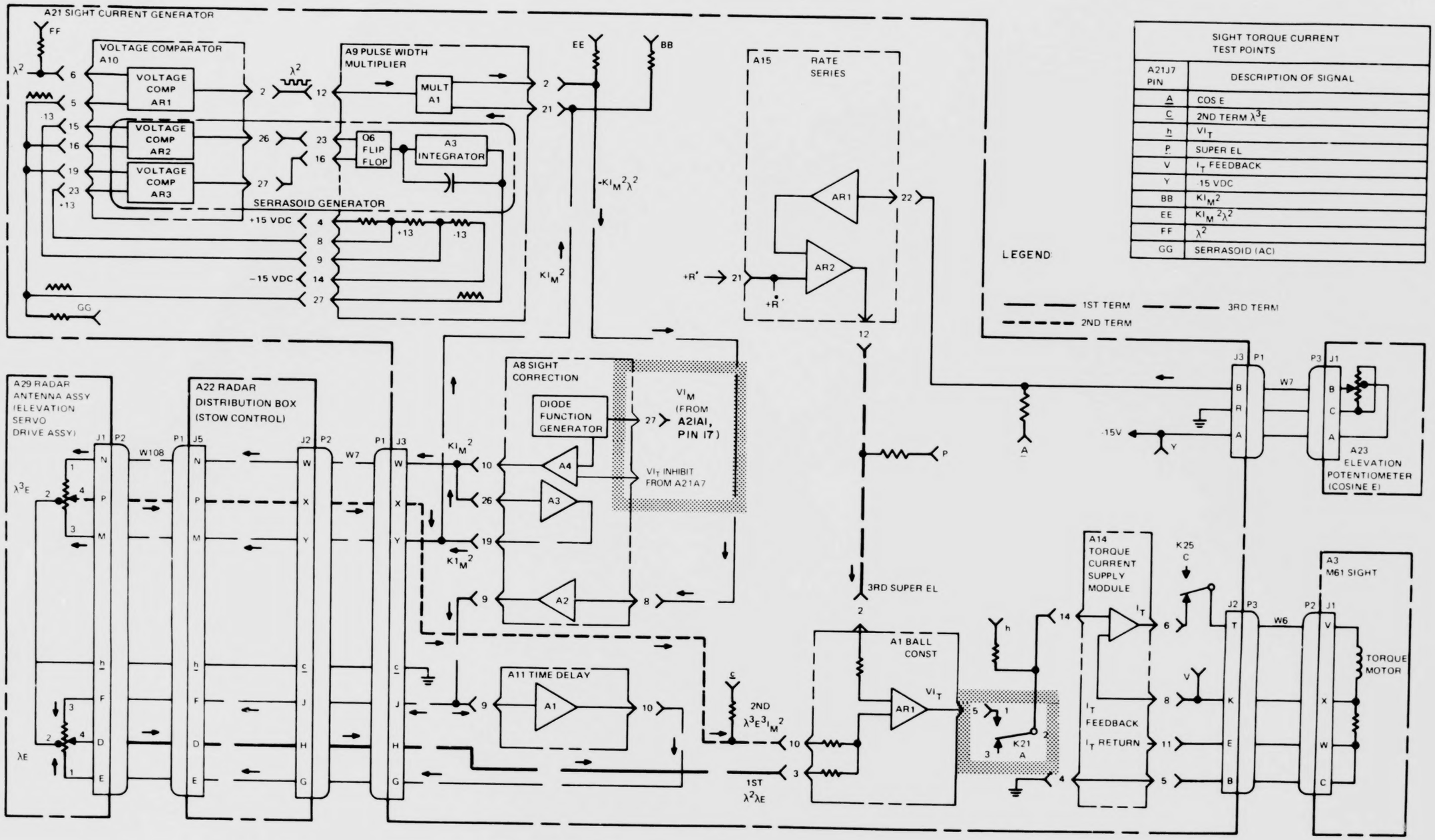

SIGHT TORQUE CURRENT TEST POINTS	
A21J7 PIN	DESCRIPTION OF SIGNAL
A	COS E
C	2ND TERM λ^3E
h	VI_T
P	SUPER EL
V	I_T FEEDBACK
Y	-15 VDC
BB	KI_M^2
EE	$KI_M^2\lambda^2$
FF	λ^2
GG	SERRASOID (AC)

Figure S-12. Sight torque current circuits functional diagram.

AMC84-1071

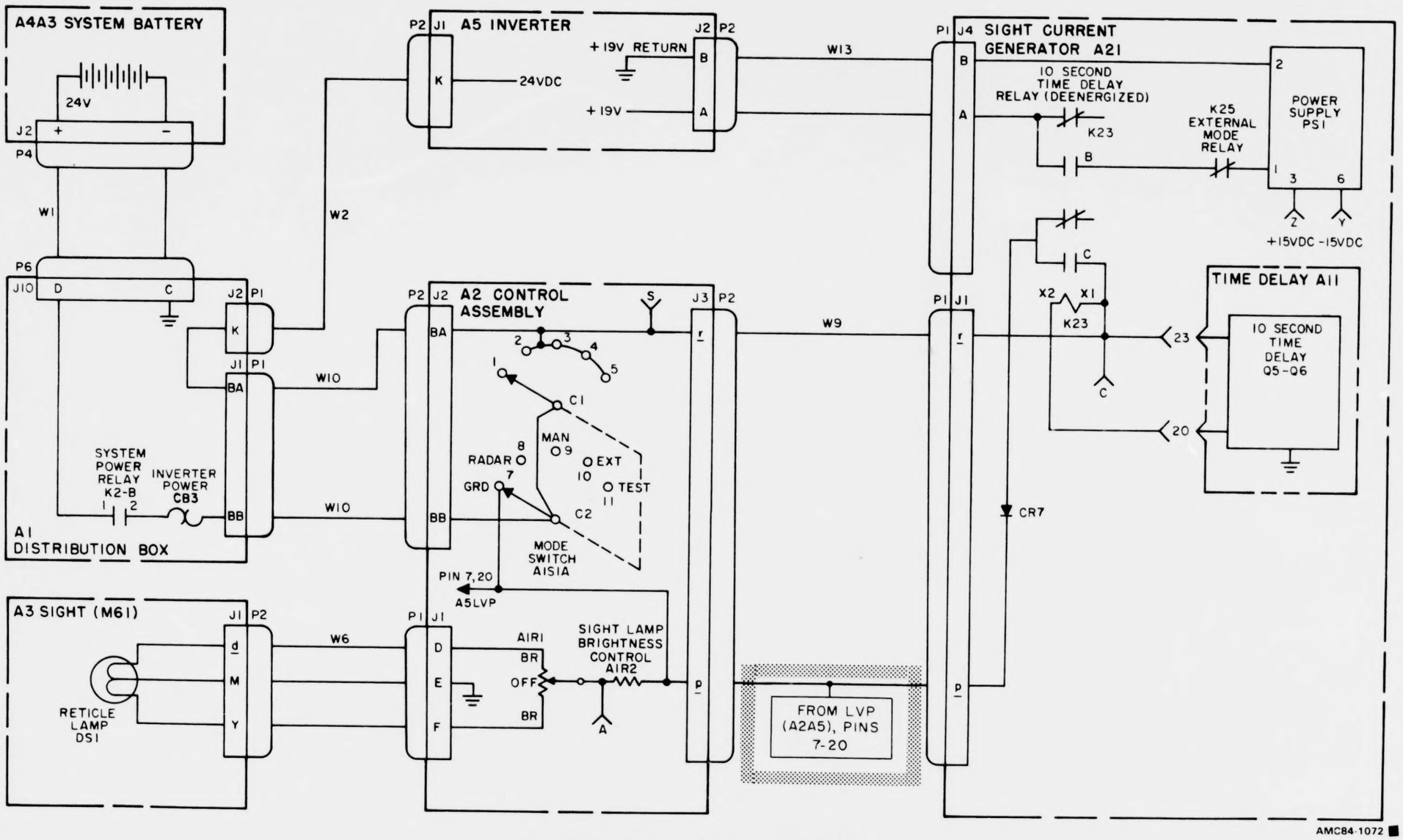

Figure S-13. Ten-second time delay circuit functional diagram.

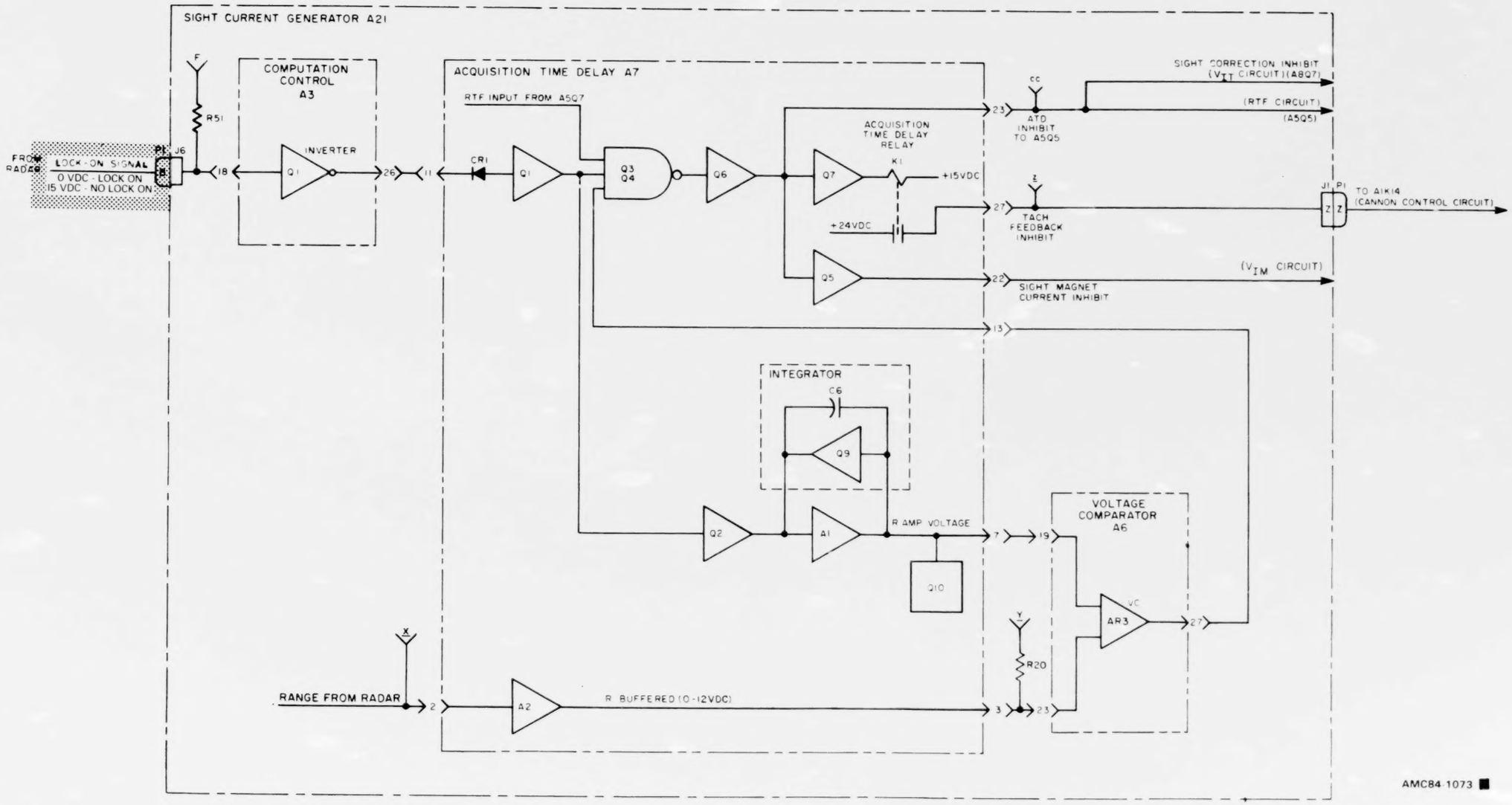

AMC84-1073

Figure S-14. Acquisition time delay circuit functional diagram.

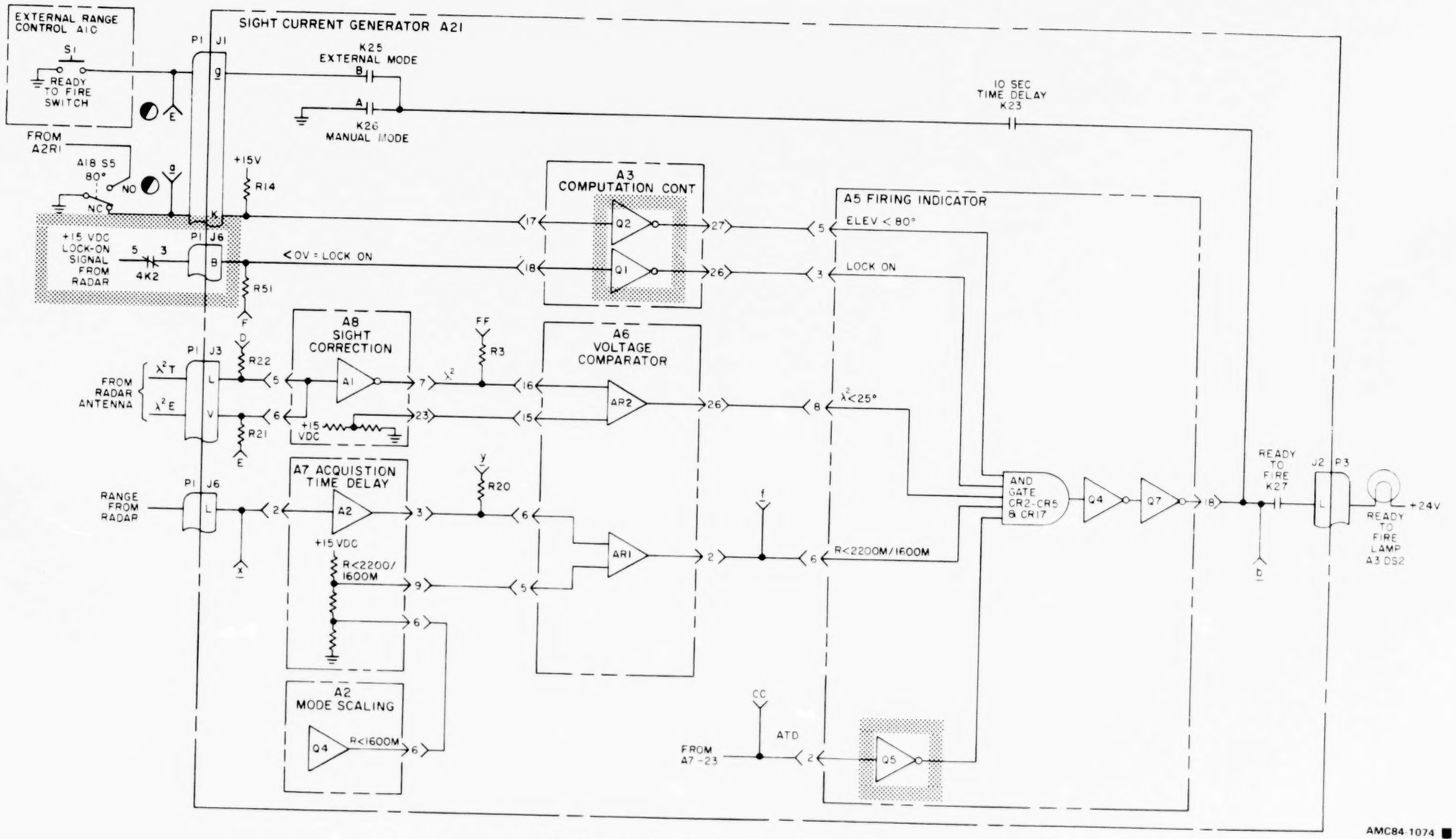

AMC84-1074

Figure S-15. Ready-to-fire circuit functional diagram.

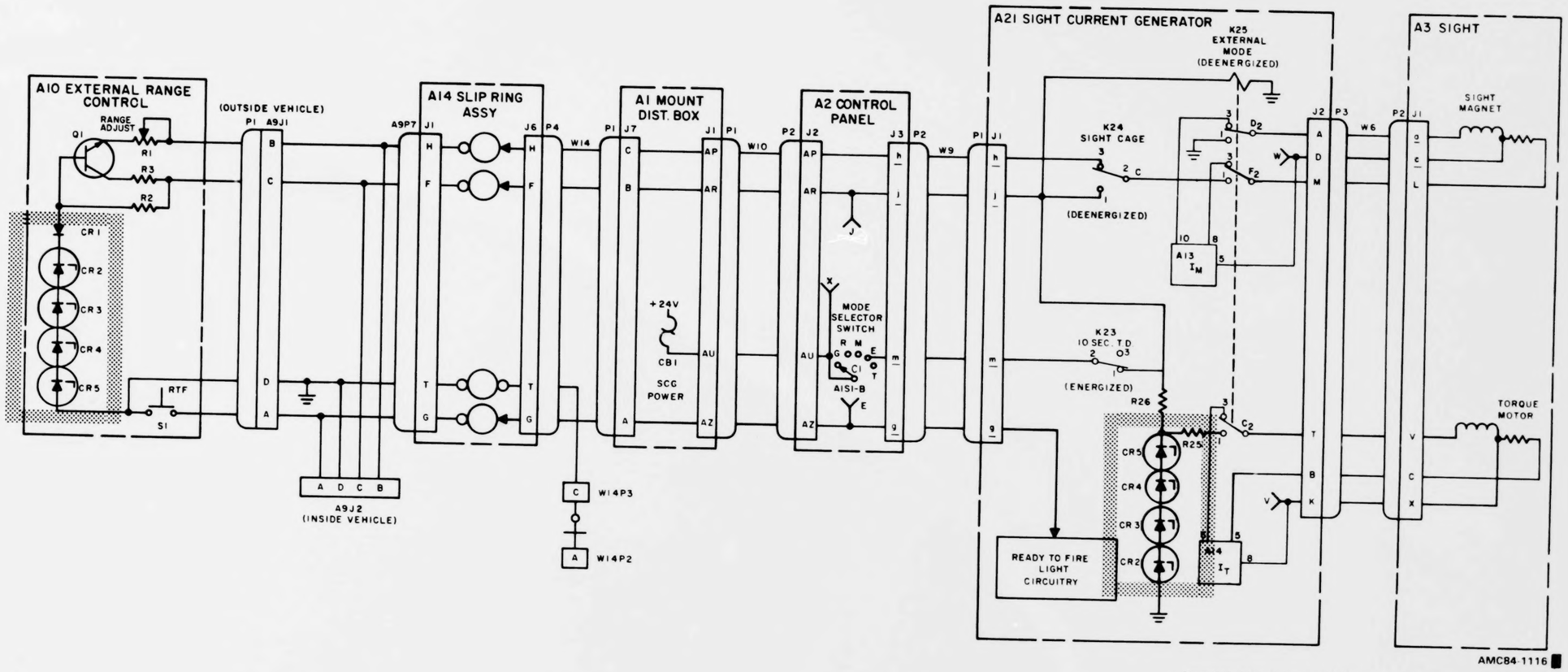

Figure S-16. External range control circuit functional diagram.

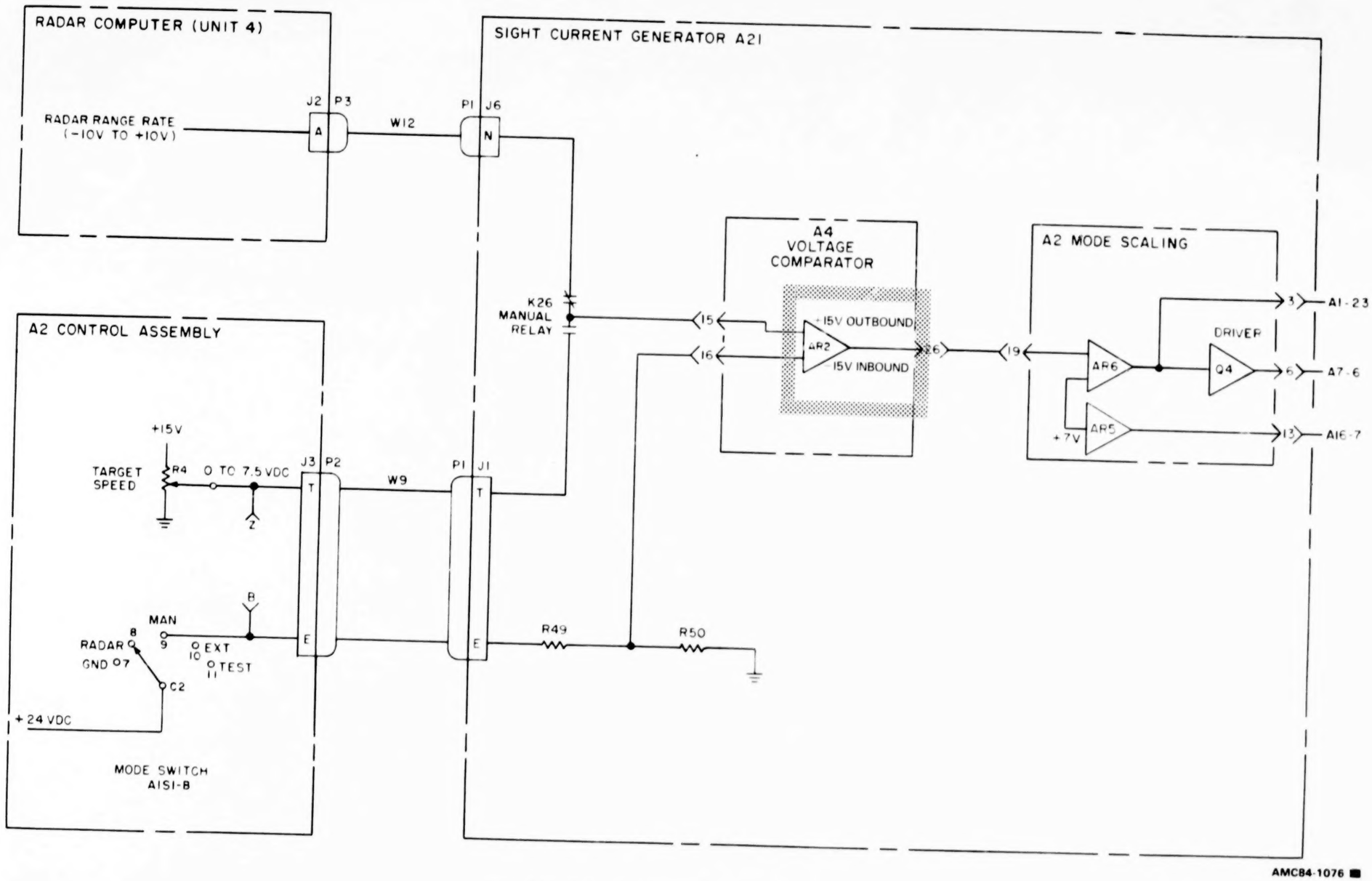

Figure S-17. Mode scaling functional diagram.

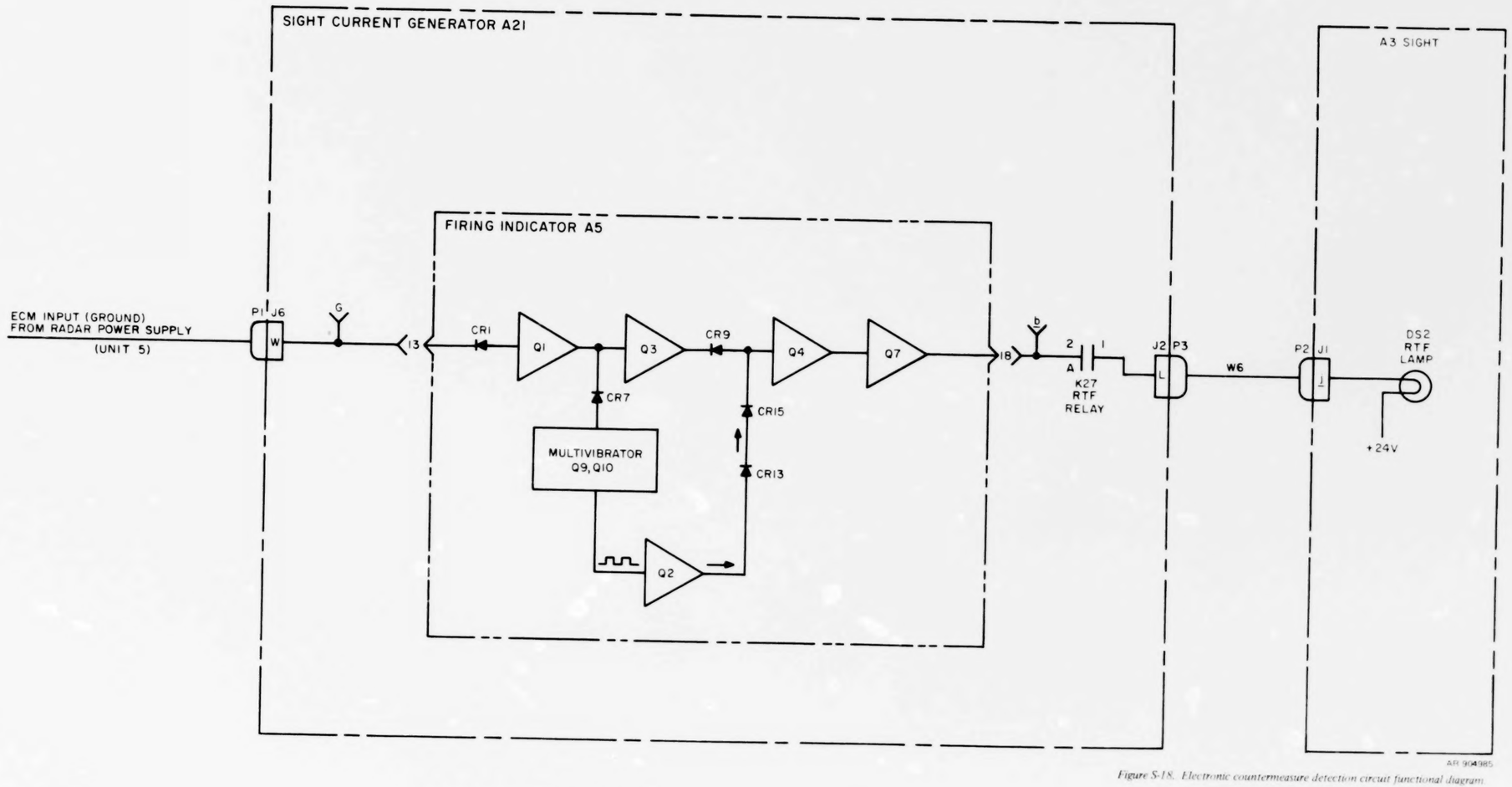

Figure S-18. Electronic countermeasure detection circuit functional diagram.

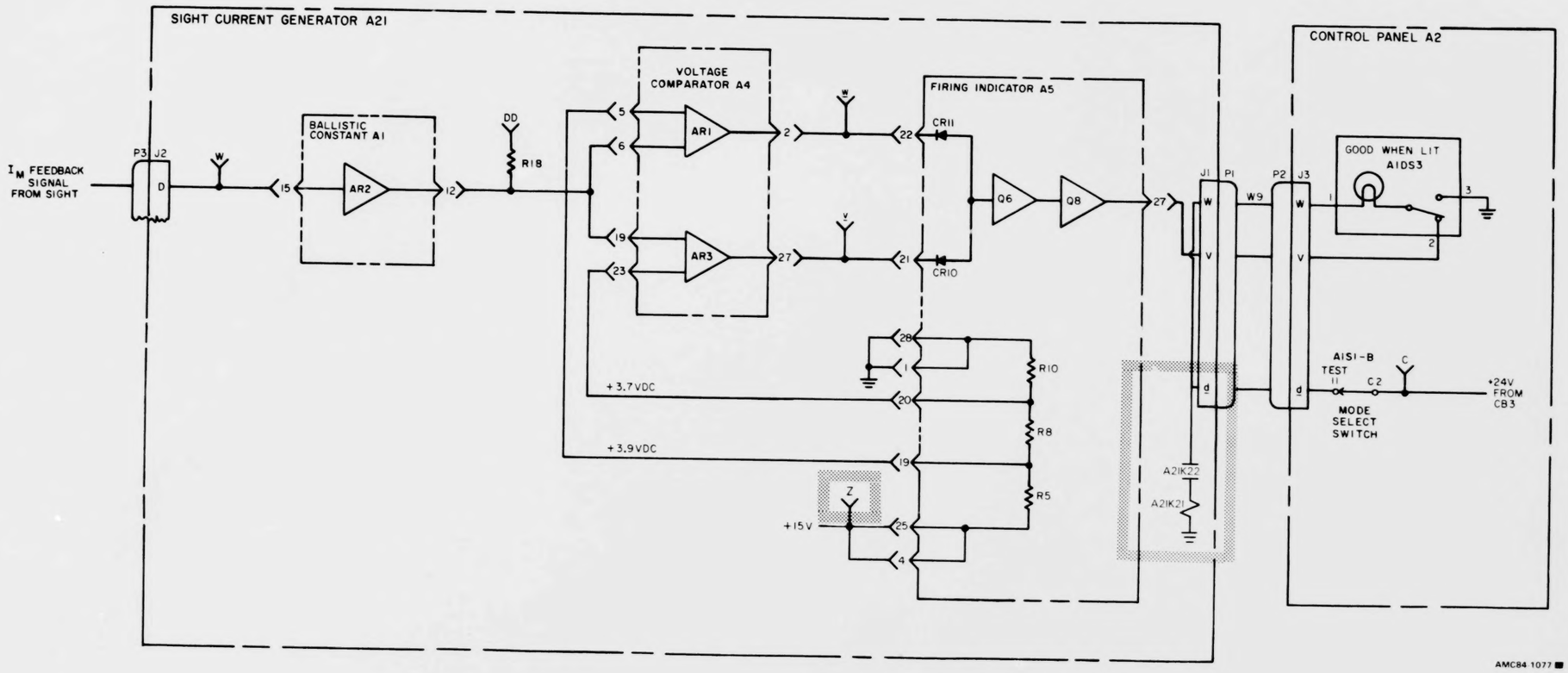

Figure S-19. Self test circuit functional diagram.

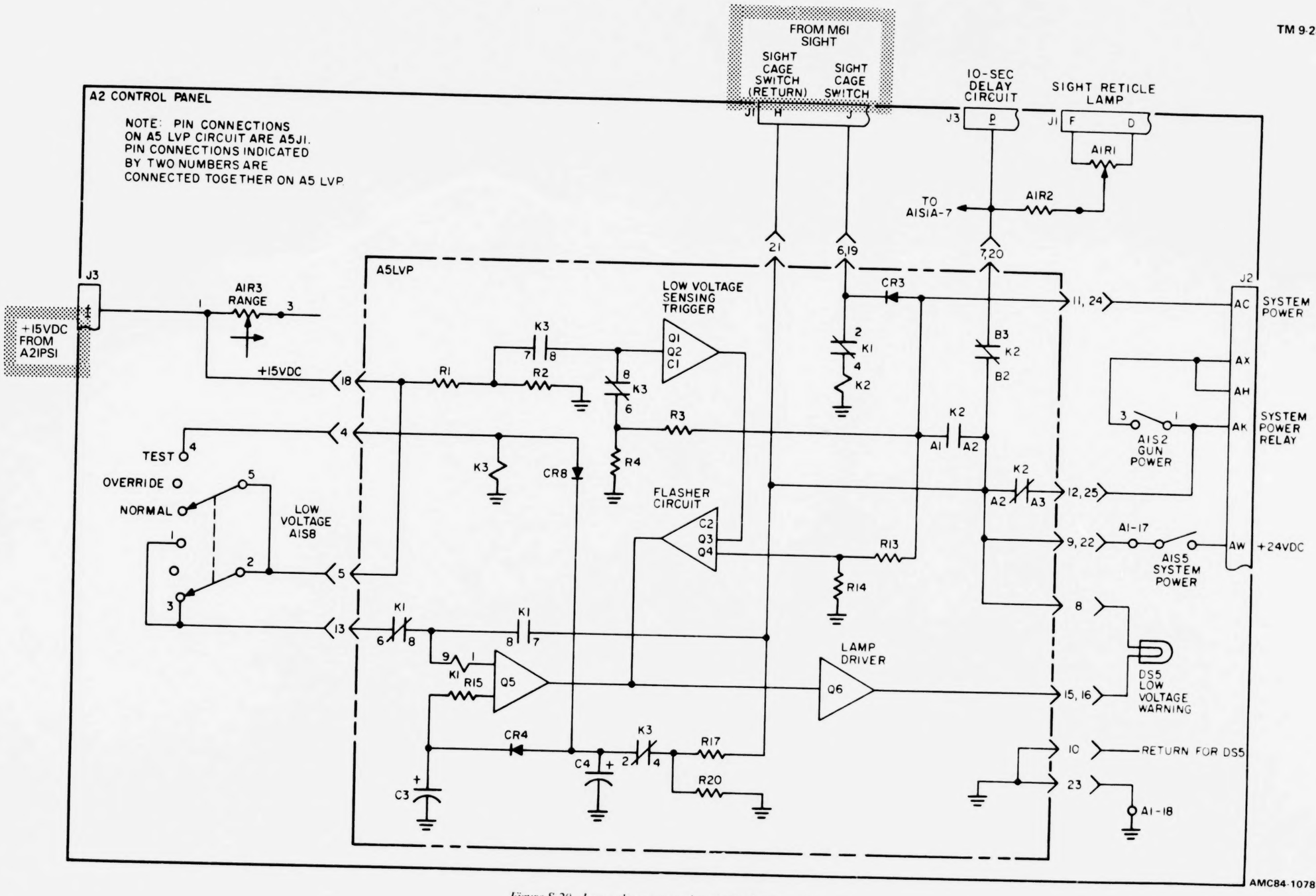

Figure S-20. Low voltage protection circuit functional diagram.

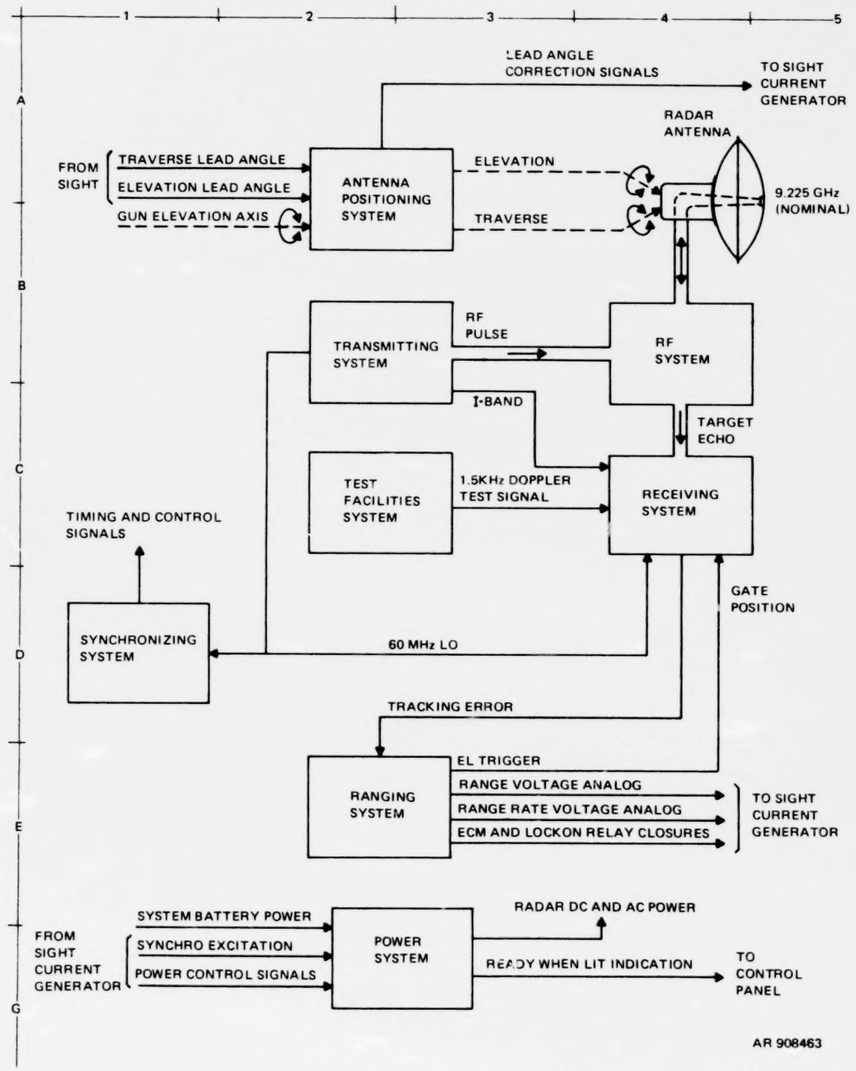

Figure S-21. Radar set AN/VPS-2 functional block diagram.

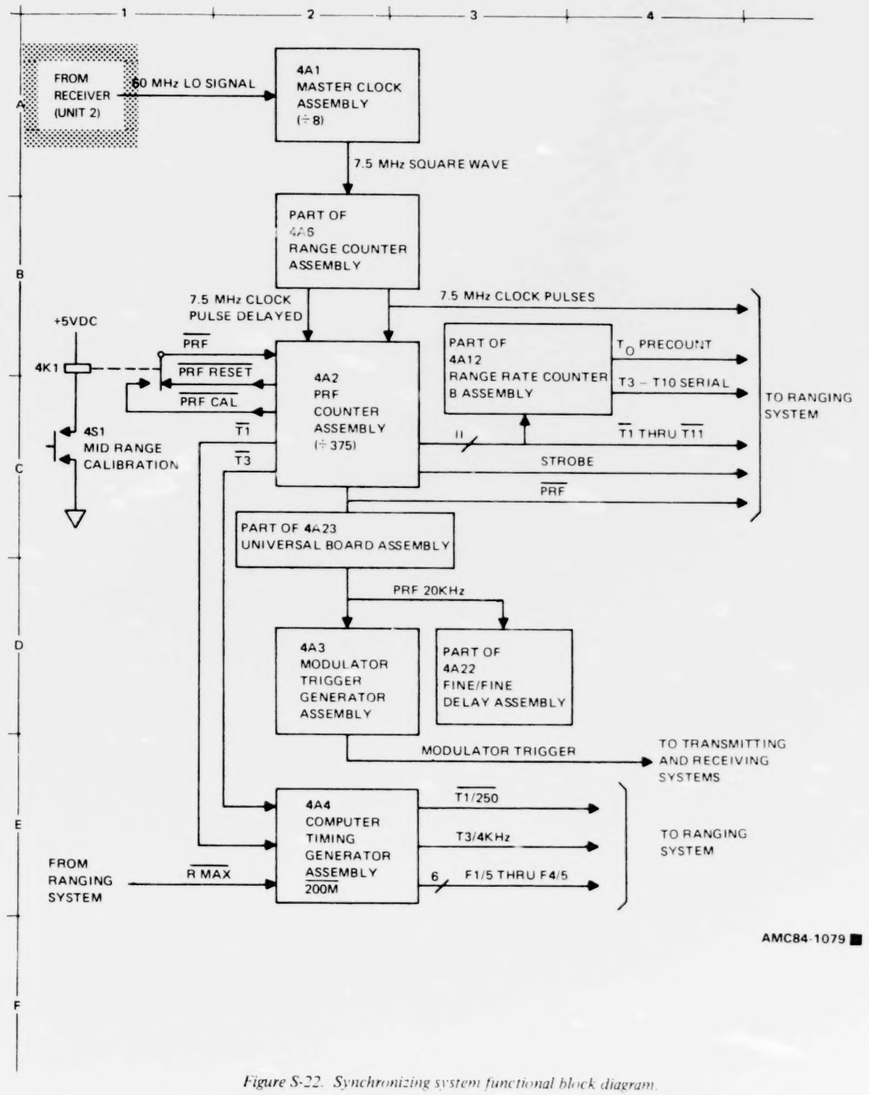

Figure S-22. Synchronizing system functional block diagram.

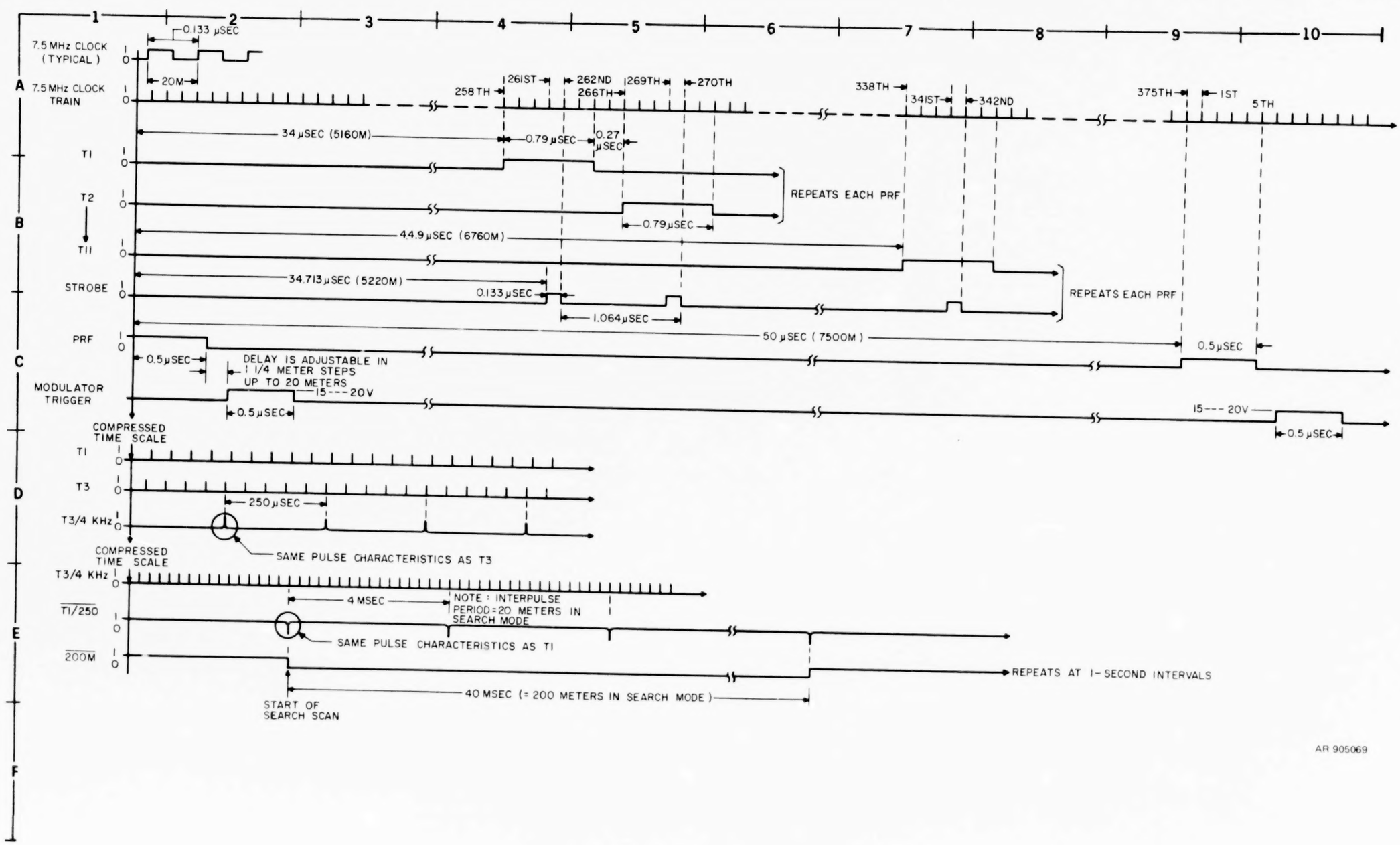

Figure S-23. Synchronizing system timing diagram.

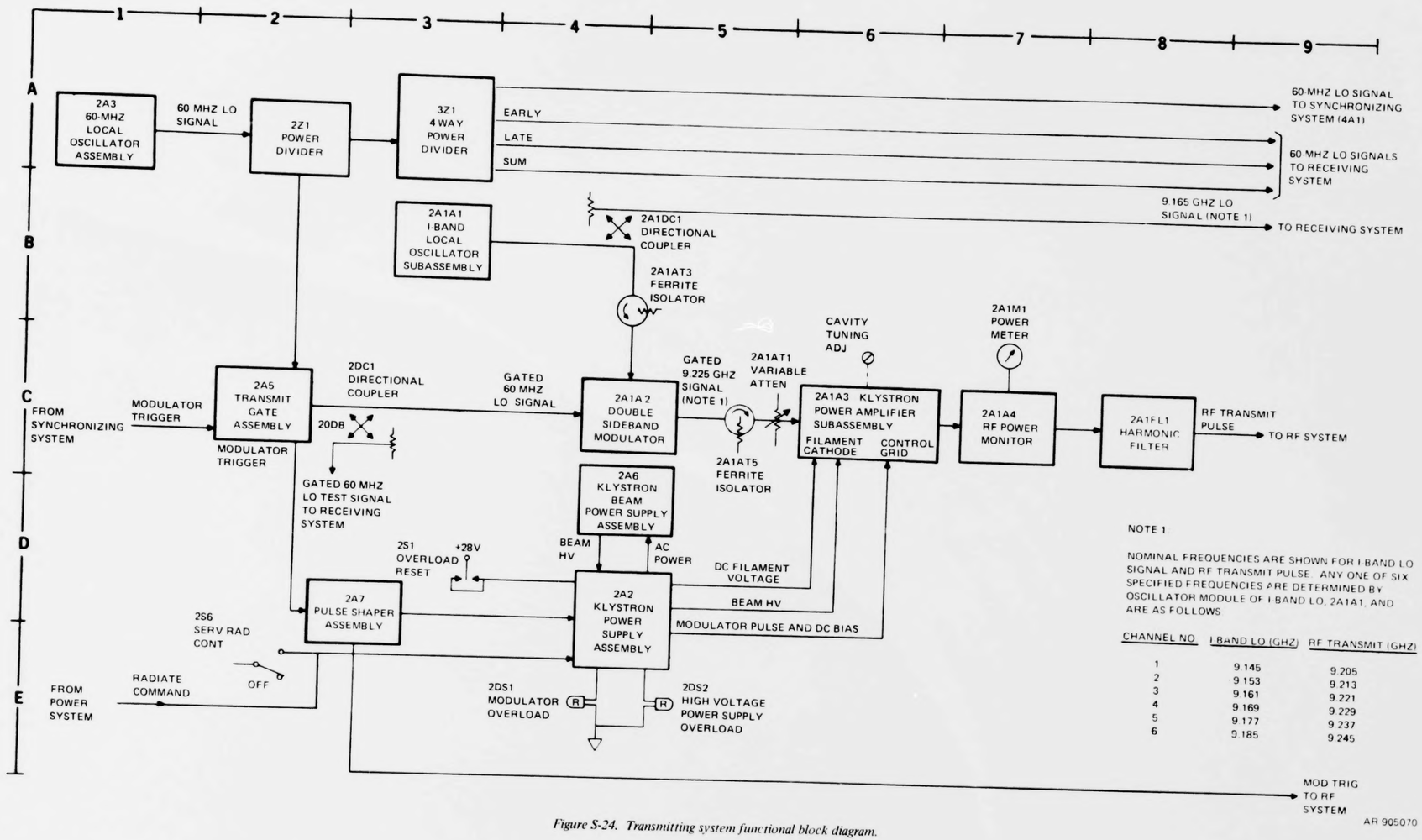

NOTE 1.

NOMINAL FREQUENCIES ARE SHOWN FOR I-BAND LO SIGNAL AND RF TRANSMIT PULSE. ANY ONE OF SIX SPECIFIED FREQUENCIES ARE DETERMINED BY OSCILLATOR MODULE OF I-BAND LO, 2A1A1, AND ARE AS FOLLOWS.

CHANNEL NO.	I-BAND LO (GHZ)	RF TRANSMIT (GHZ)
1	9.145	9.205
2	9.153	9.213
3	9.161	9.221
4	9.169	9.229
5	9.177	9.237
6	9.185	9.245

Figure S-24. Transmitting system functional block diagram.

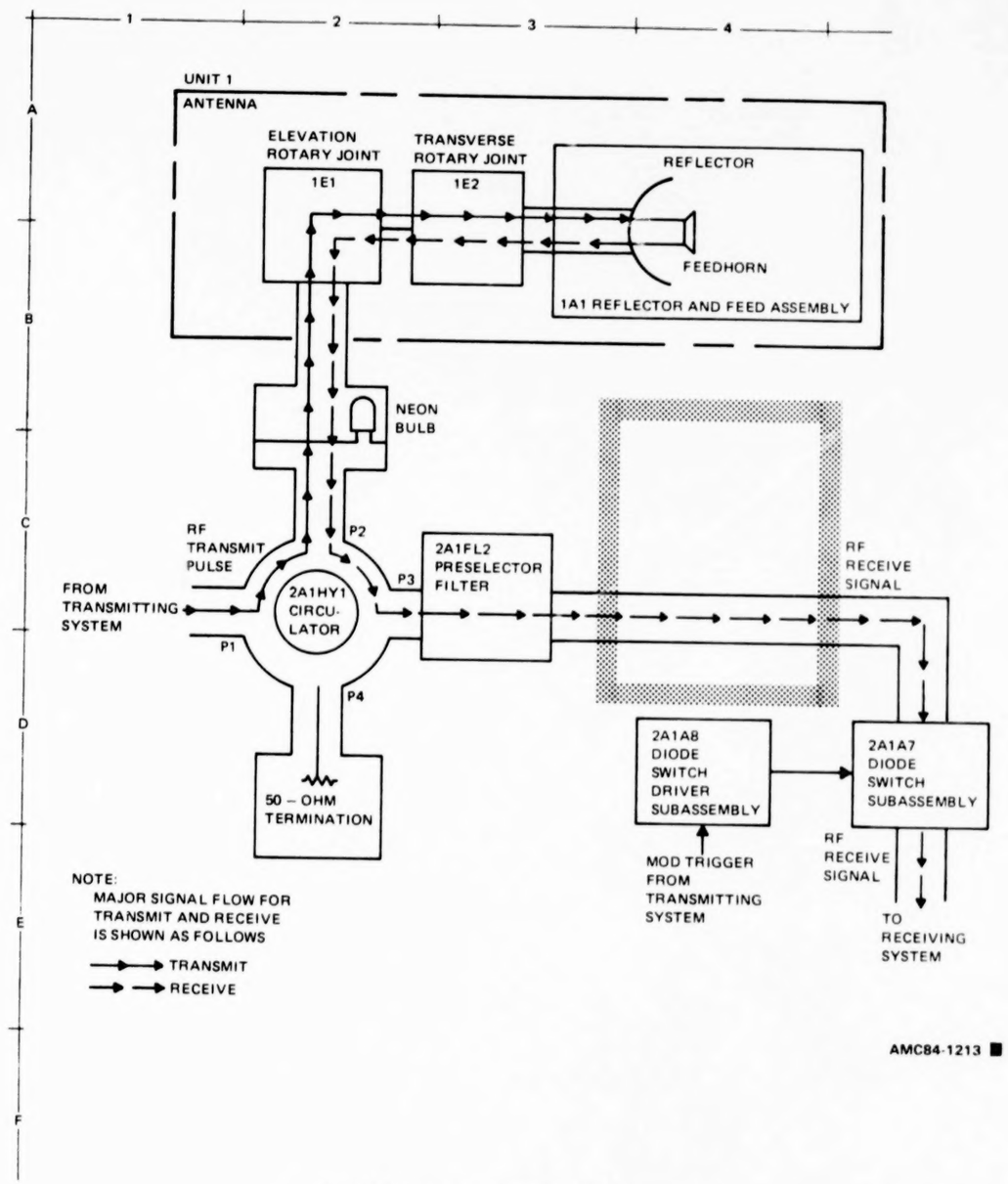

Figure S-25. RF system functional block diagram.

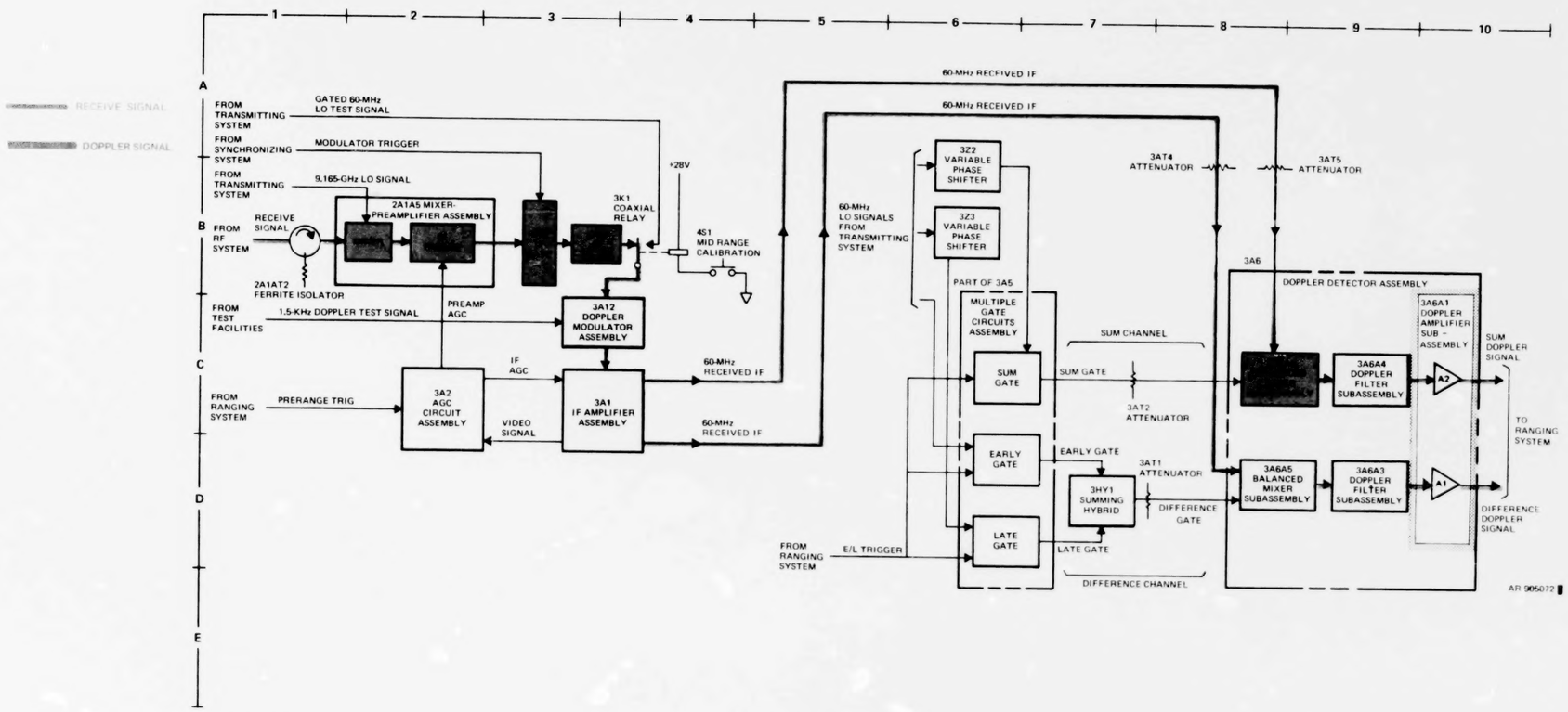

Figure S-26. Receiving system functional block diagram.

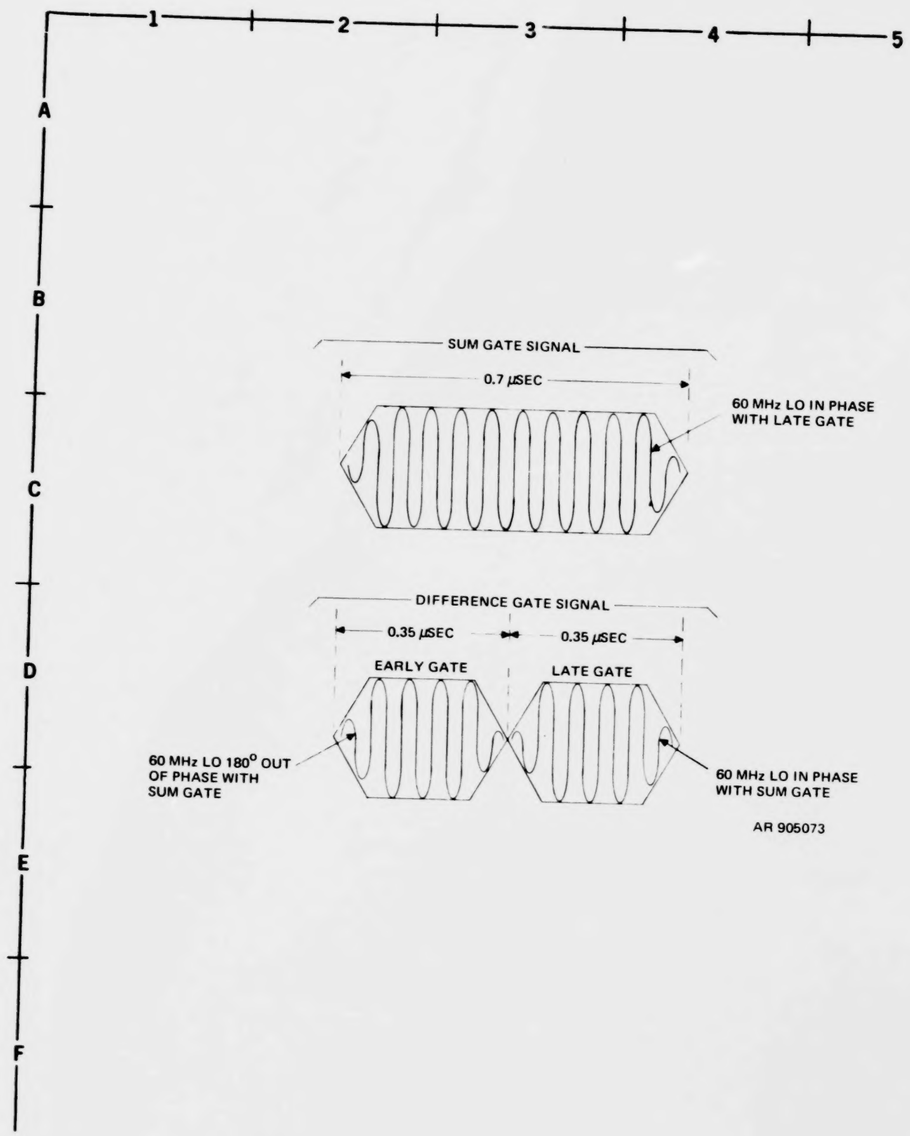

Figure S-27. Sum and difference gate signals waveform diagram.

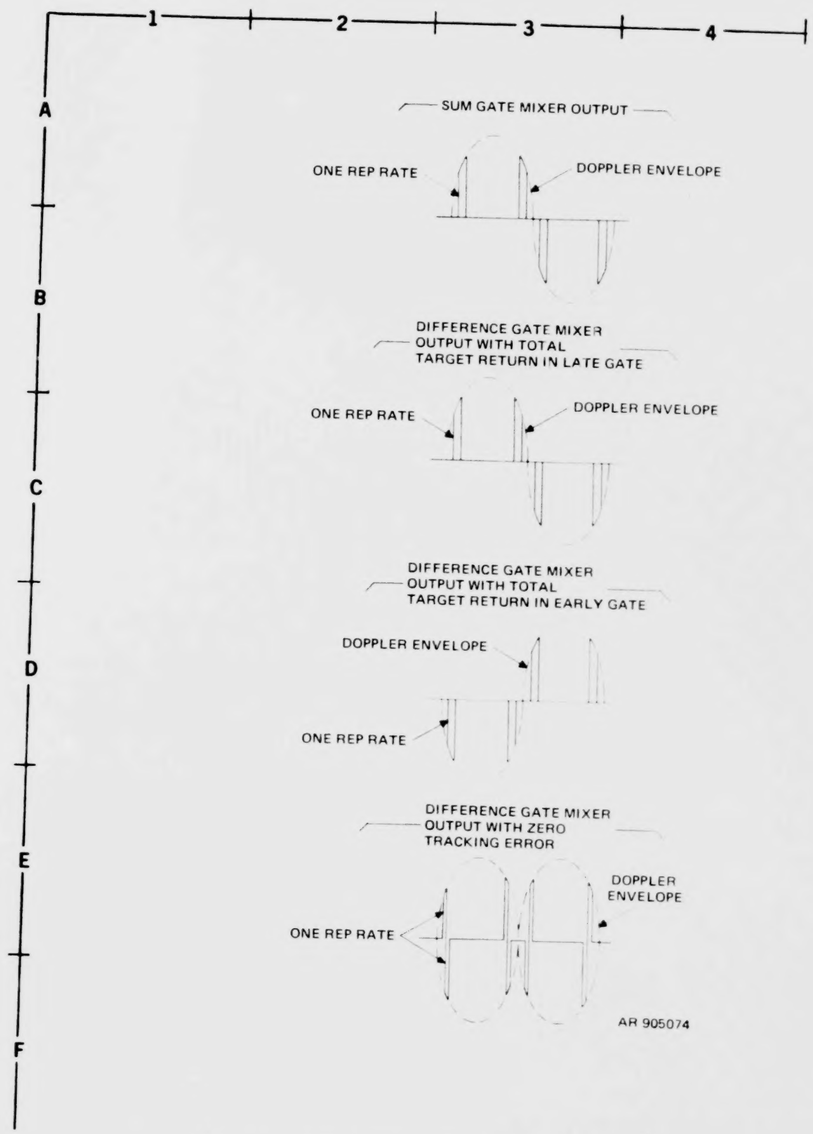

Figure S-28. Output of sum and difference gates waveform diagram.

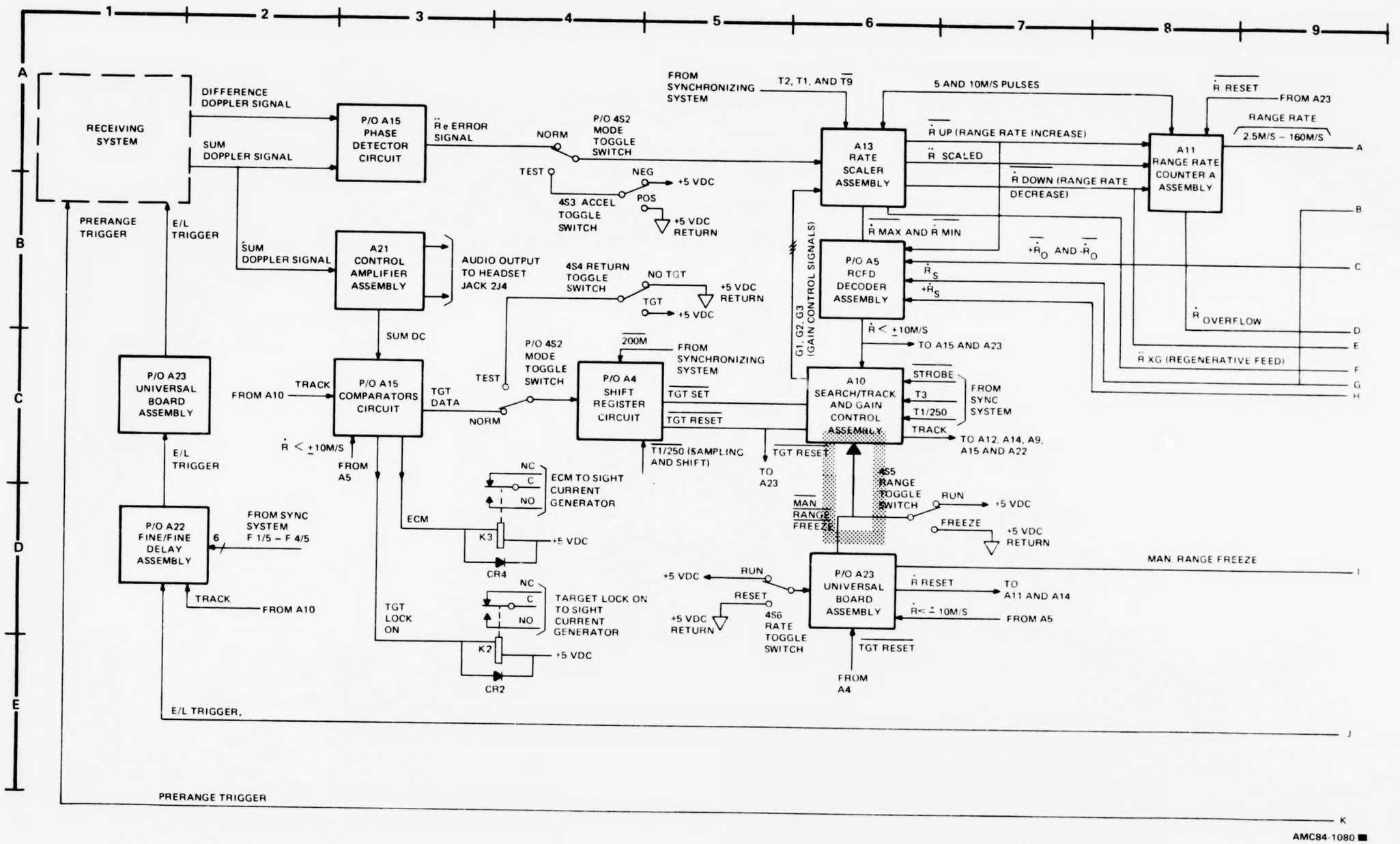

Figure S-29. Ranging system functional block diagram (sheet 1 of 2).

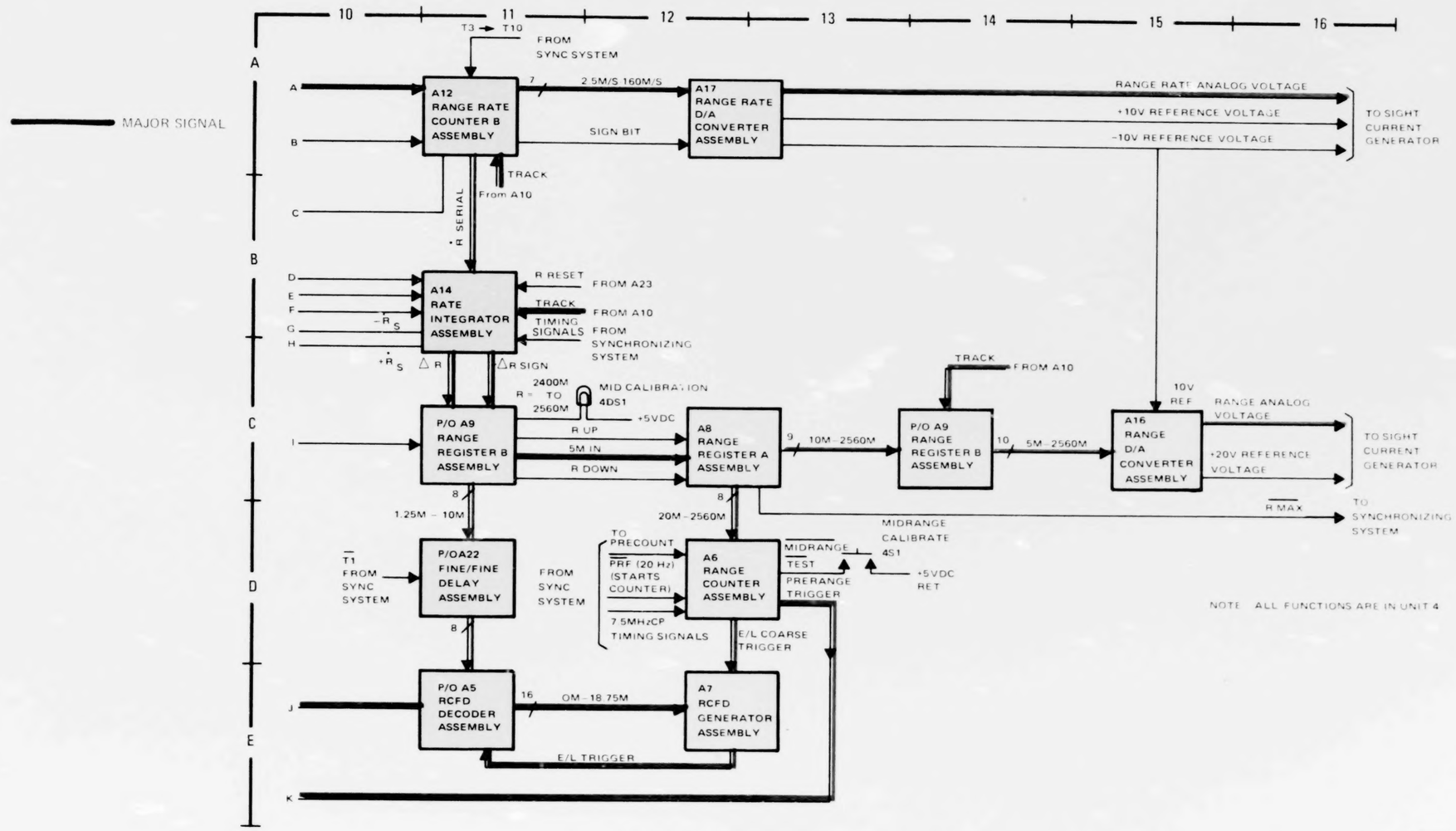

Figure S-29. Ranging system functional block diagram (sheet 2 of 2).

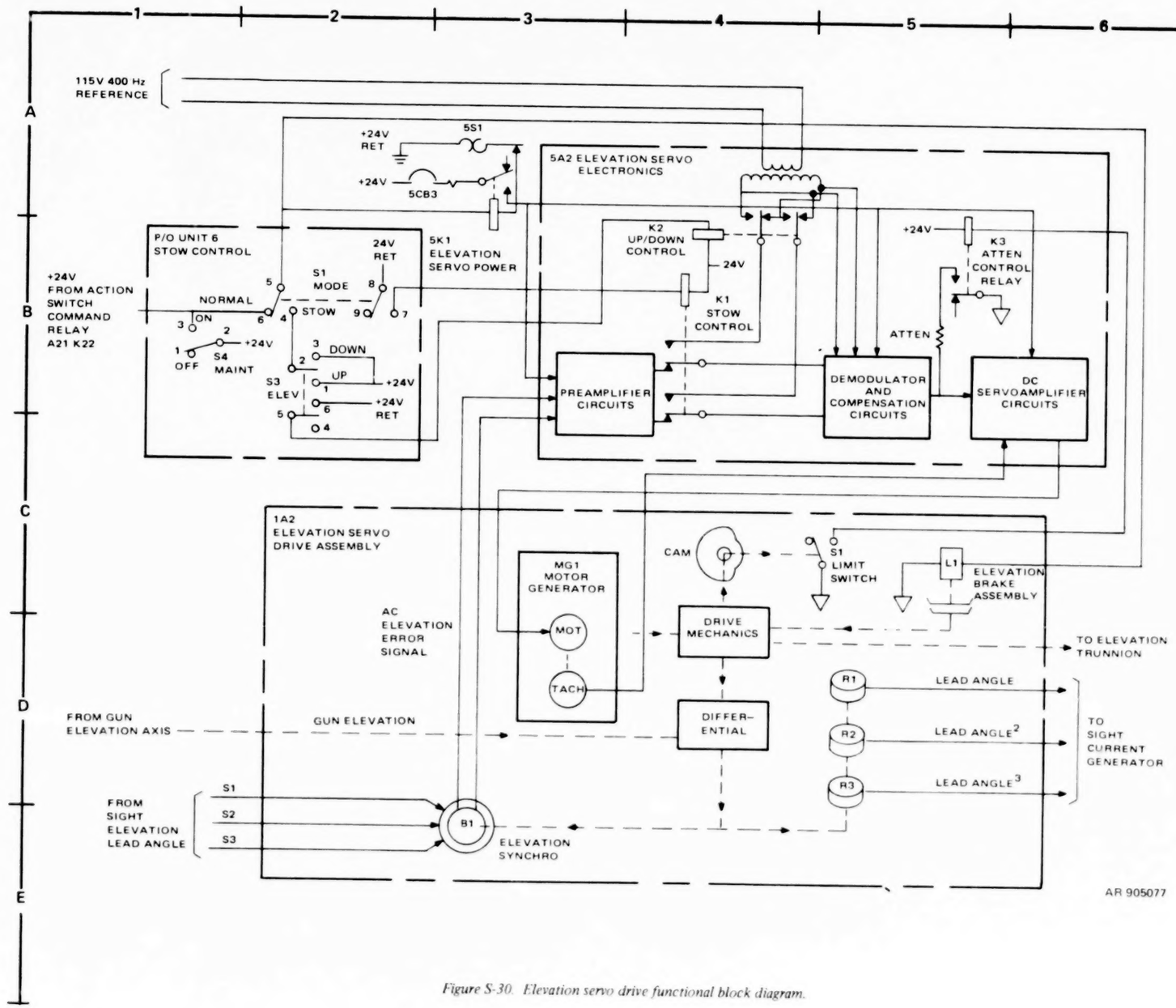

Figure S-30. Elevation servo drive functional block diagram.

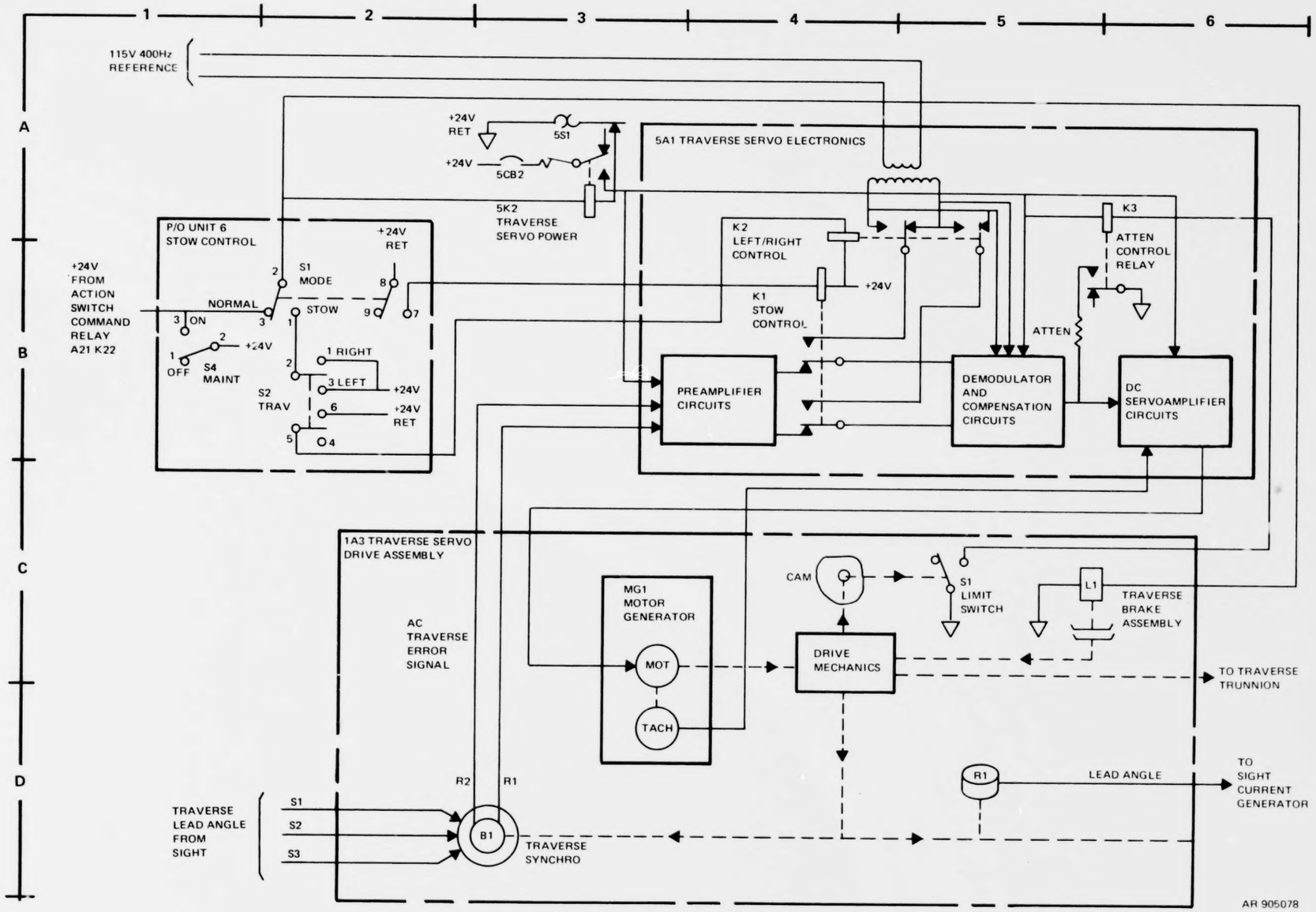

Figure S-31. Traverse servo drive functional block diagram.

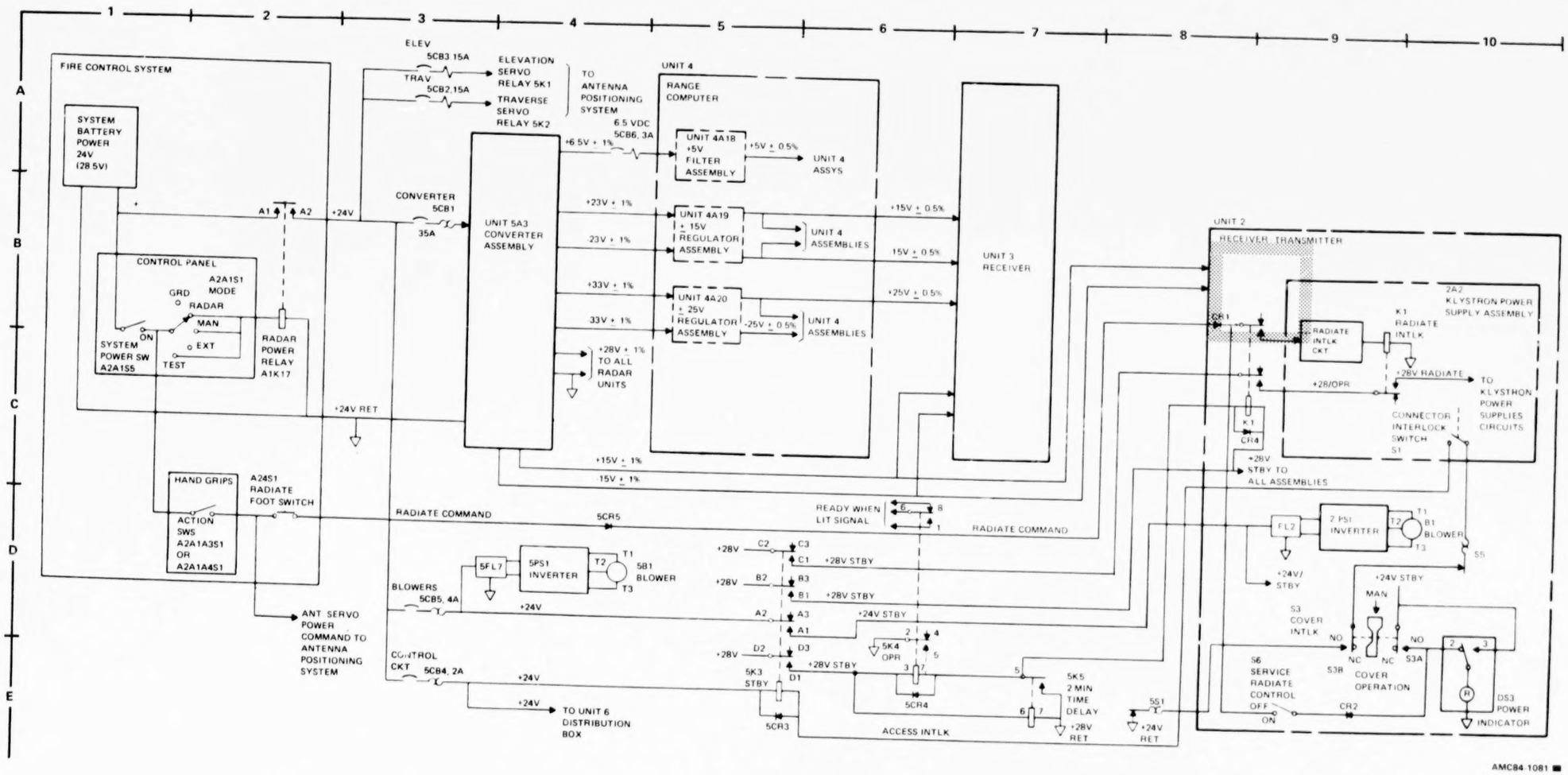

Figure S-32. Radar power system functional block diagram.

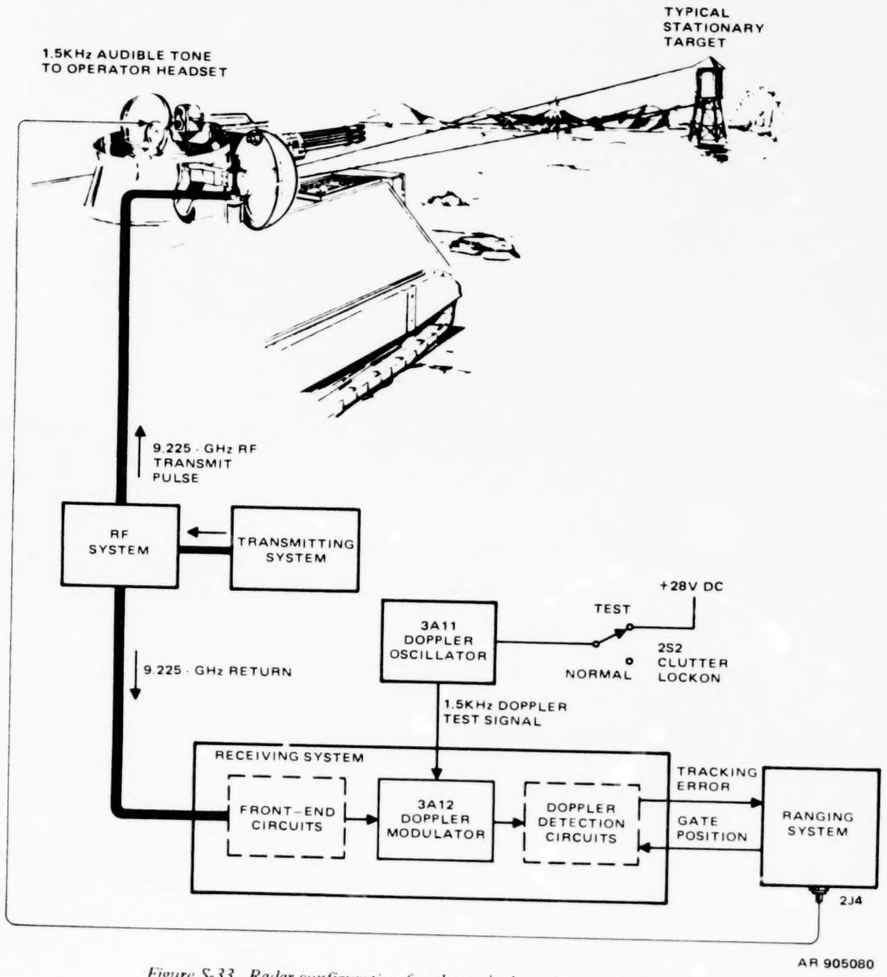

Figure S-33. Radar configuration for clutter lock-on functional block diagram.

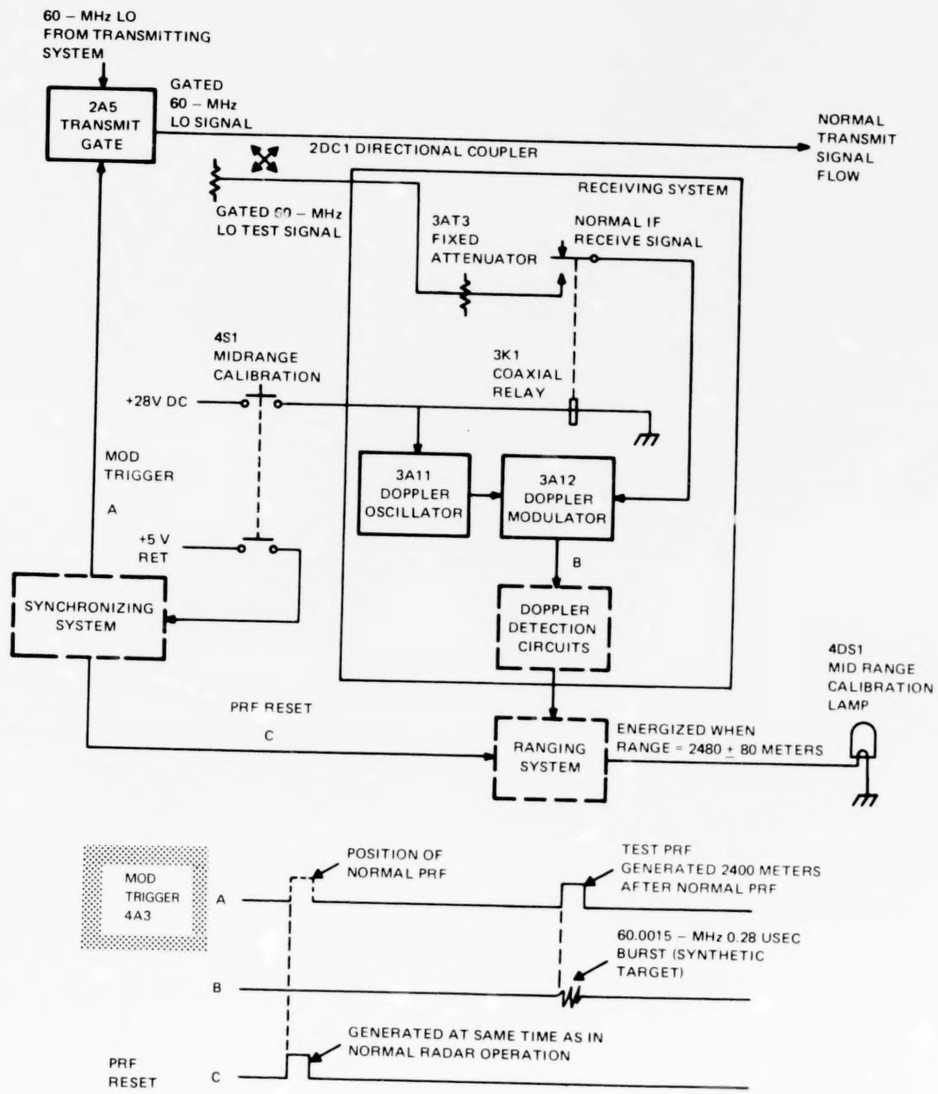

Figure S-34. Radar configuration for midrange calibration functional block diagram.

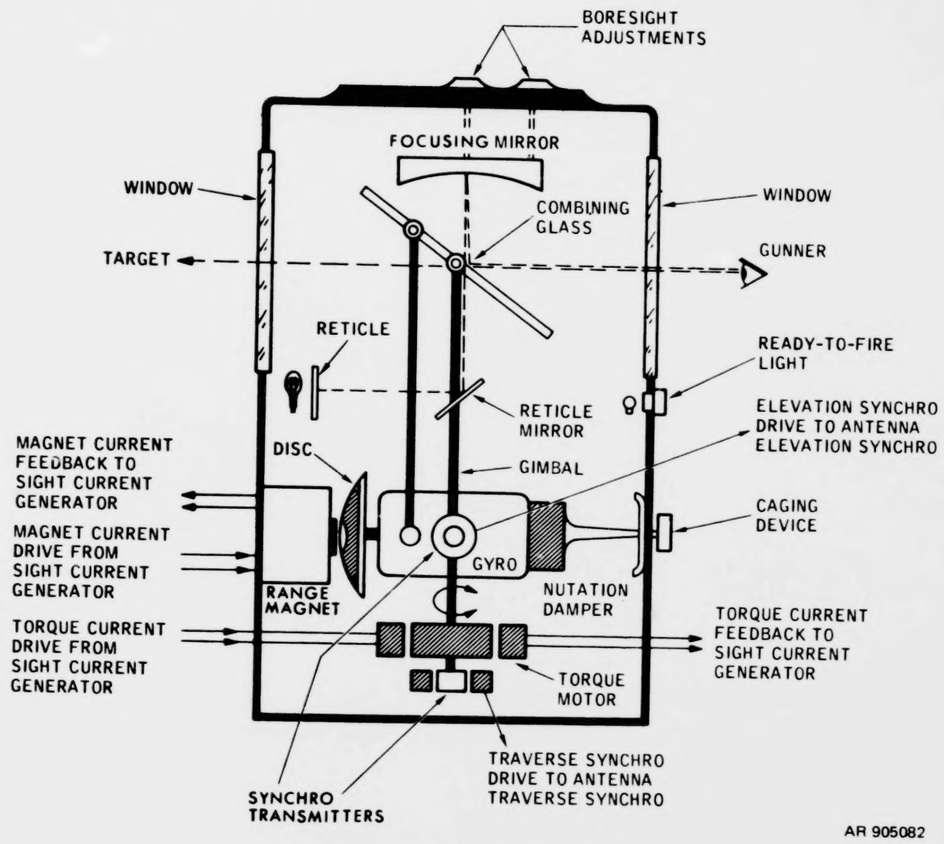

Figure S-35. Sight mechanism diagram.

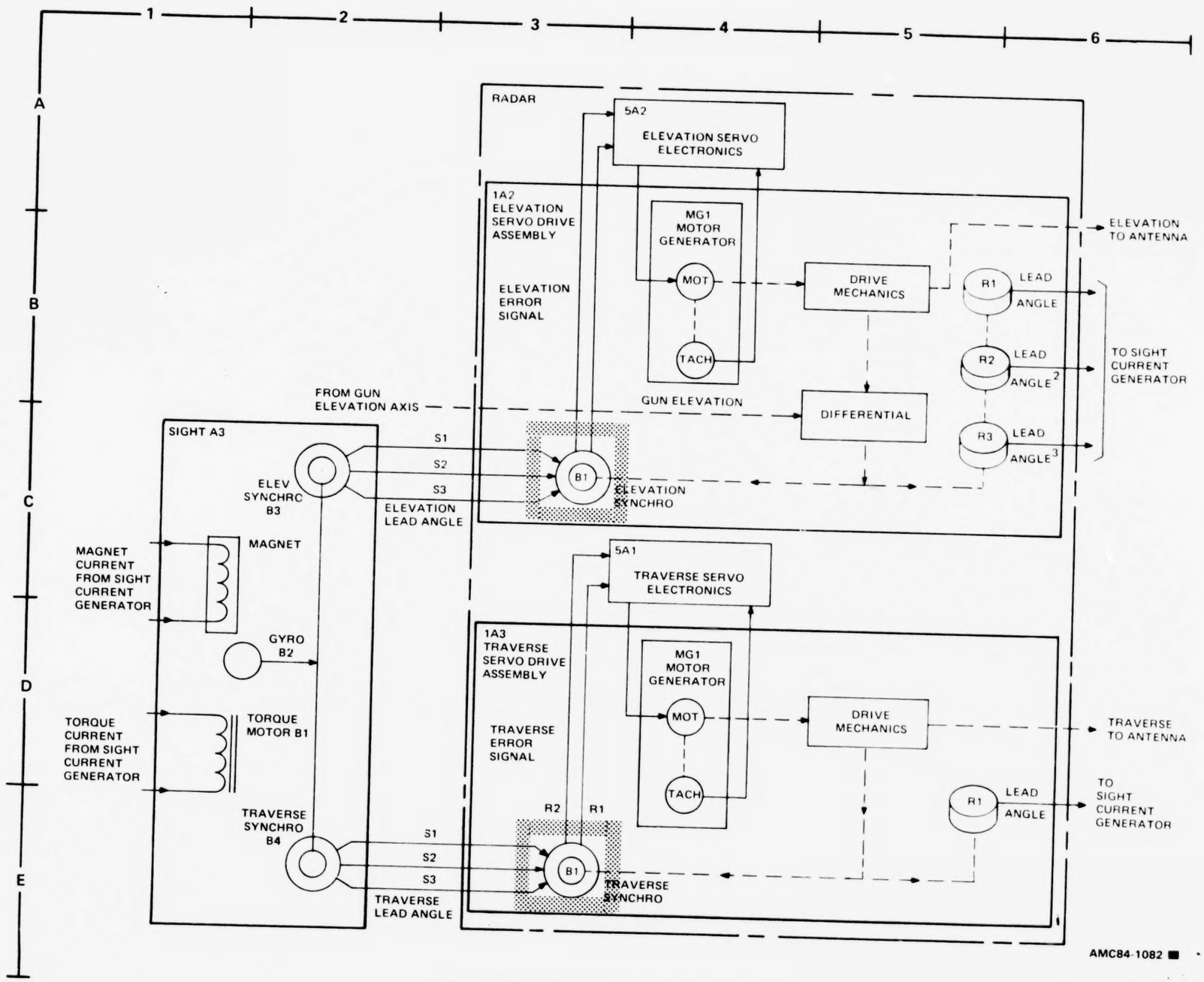

Figure S-36. Sight and radar interface functional diagram.

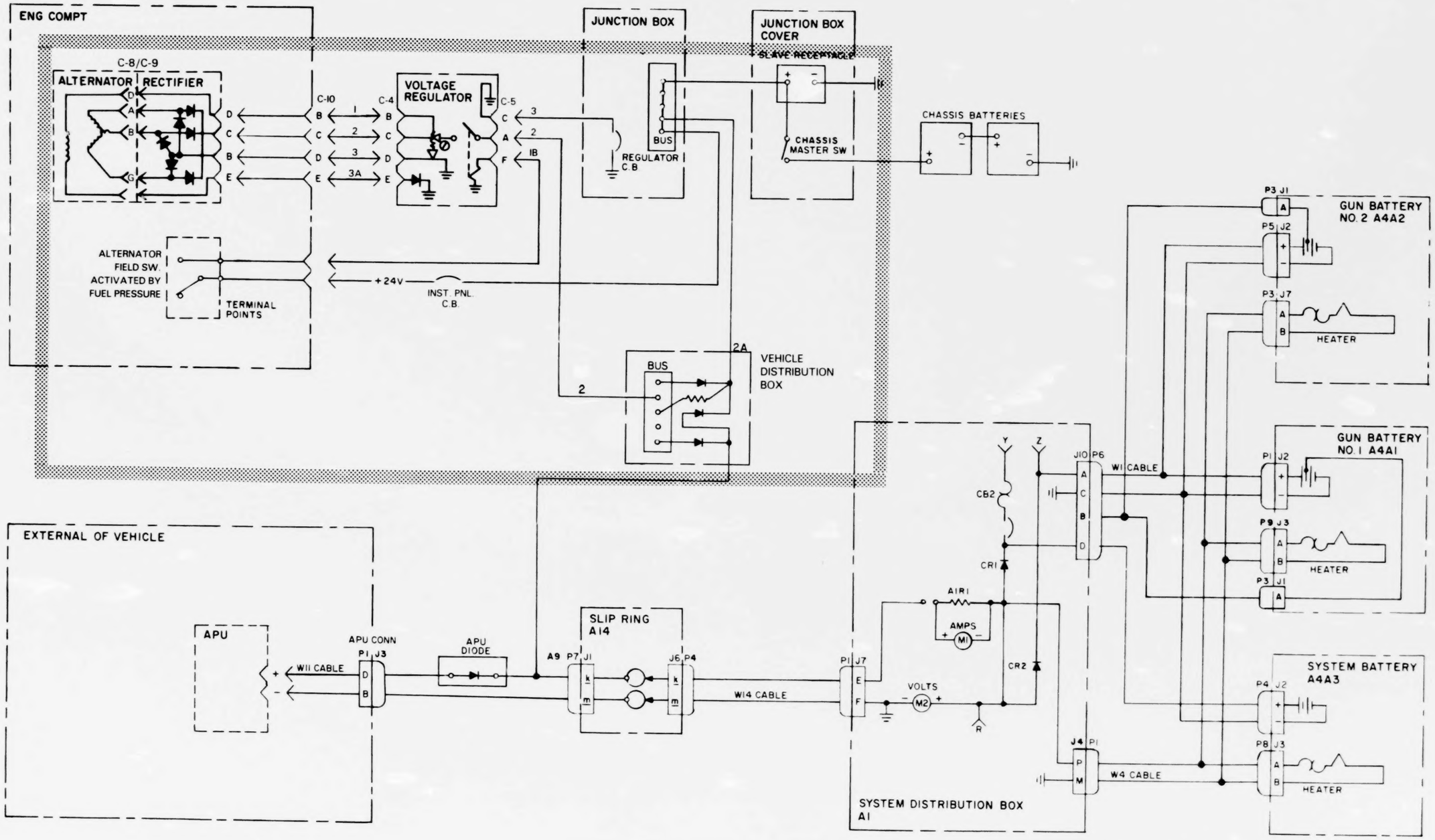

Figure S-37. Battery charging circuit functional diagram.

AMC84-1118

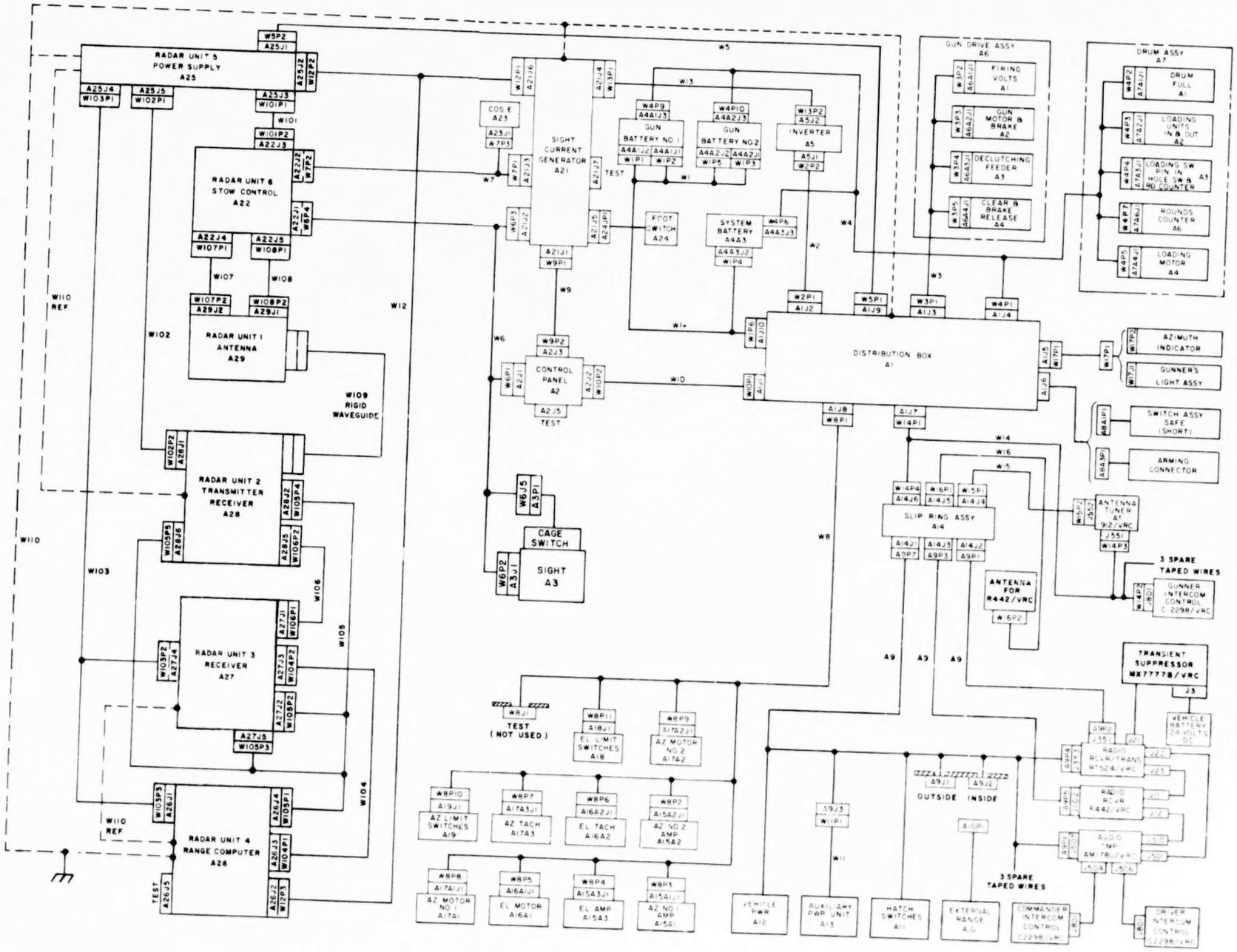

Figure S-38. System simplified interconnection diagram.

NOTES FOR FIGURE S-39

1. The following symbols and the applicable pin letter are used to define test points:

   ⊗ Distribution Box (A1) ◐ Control Assembly (A2)

   ○ Sight Current Generator (A21)

2. Circuits are shown with relay coils deenergized and no ammunition in the drum.
3. Polarity data and conventions:
   - a. Motors viewed from brake end.
   - b. Potentiometers (POT) and tachometers (TACH) viewed from shaft end.
   - c. Tachometer polarity shown when driven counterclockwise (CCW).
   - d. Clockwise (CW) and CCW refer to potentiometer, tachometer, and motor rotation.
   - e. Right, left, up and down refer to cannon movement.
4. Battery low rate battery taps are moved to 10.1 volts at or below 32°F.
5. Time delay tolerances:

BURST LIMIT TIMING CIRCUITS-DELAY TIMES AND TOLERANCES

Firing rate switch A2A1S4 position	Firing time (sec)	
	Minimum delay	Maximum delay
LO-NO BURST LIMIT	0.12	0.16
HI-BURST LIMIT - 10 rounds	0.29	0.31
HI-BURST LIMIT - 30 rounds	0.67	0.78
HI-BURST LIMIT - 60 rounds	1.17	1.39
HI-BURST LIMIT - 100 rounds	1.82	2.20

RELAY DROPOUT DELAY TIMES AND TOLERANCES

Relay functions	Relay no.	Time from	Minimum delay (sec)	Maximum delay (sec)
Firing volts	A1K6	Trigger release	0.5	1.0
Low time delay	A1K9	Trigger release	0.14	0.18
Clearing	A1K11	Trigger release	2.0	3.0
Last round (INOPERATIVE)	A1K12			

M163A1 SYSTEM COMPONENT REFERENCE LIST

COMPONENT REFERENCE DESIGNATION	COMPONENT	ZONE
A1	DISTRIBUTION BOX (see distribution box list for individual components)	49-107
A2	CONTROL PANEL (see control panel list for individual components)	45-47A-J
A3	M61 SIGHT	28-36A,B
A4	BATTERY ASSEMBLY (SYSTEM BATTERY A4A3 and GUN BATTERIES A4A1 and A4A2)	7-12A
A5	INVERTER	1G-J
A6	GUN DRIVE ASSEMBLY	3-7A
A6A1	FIRING (VOLTS) PIN (FIRING CONTACT ASSEMBLY)	3A
A6A2	GUN MOTOR AND BRAKE	6A
A6A3	DE-CLUTCHING SOLENOID	4A
A6A4	BRAKE-CLEAR AND BRAKE SWITCH	4,5A
A7	DRUM ASSEMBLY	72,75E
A7A1	DRUM FULL SWITCH	74E
A7A2	LOADING UNIT SWITCHES (CONVEYOR DETECTION ASSEMBLY)	73E
A7A3	LOADING MOTOR SWITCH	73E
A7A4	LOADING MOTOR	75E
A7A5	LAST ROUND SWITCH (INOPERATIVE)	
A7A6	ROUNDS COUNTER	72E
A8A1	ARM-SAFE (SHORT) SWITCH AND LEAD ASSEMBLY	4C,D
A8A3	ARMING CONNECTOR	3C,D
A9	COMMUNICATIONS (OUTSIDE)	109-123D,E
A10	EXTERNAL RANGE CONTROL	110-112A-D
A11S1	DRIVER'S HATCH SWITCH	114A
A11S2	COMMANDER'S HATCH SWITCH	115C
A12	VEHICLE POWER	109D
A13	AUXILIARY POWER	109D

AR 905496

Figure S-39. Detailed interconnection diagram (sheet 1 of 20).

M163A1 SYSTEM
COMPONENT REFERENCE LIST - CONT.

COMPONENT REFERENCE DESIGNATION	COMPONENT	ZONE
A14	SLIP RING ASSEMBLY	108–123E, F
A14S1	GUN POSITION SWITCH	113C
A15A1	AZ AMPLIFIER 1	86–89A
A15A2	AZ AMPLIFIER 2	80–84A
A15A3	EL AMPLIFIER	78–80A
A16A1	EL MOTOR	77A
A16A2	EL TACHOMETER	90A
A17A1	AZ MOTOR 1	84–85A
A17A2	AZ MOTOR 2	80–81A
A17A3	AZ TACHOMETER	89A
A18	EL LIMIT SWITCHES	99–101A–C
A19	AZ LIMIT SWITCHES	102A–C
A21	SIGHT CURRENT GENERATOR	10D
A23	COSINE E POT (ELEVATION POT)	17C
	NOTE AN/VPS-2 Radar set components carry a system component designation and a radar set unit number. The following list identifies the system component designation to the radar unit number.	
A22	(UNIT 6) DISTRIBUTION BOX (commonly referred to as the STOW CONTROL)	18–22A–C
A24	FOOT SWITCH	6J
A25	(UNIT 5) POWER SUPPLY	6, 7E
A26	(UNIT 4) RANGE COMPUTER	6, 7G
A27	(UNIT 3) RECEIVER	4, 5H
A28	(UNIT 2) RECEIVER – TRANSMITTER	4, 5J
A29	(UNIT 1) ANTENNA	19–21A,B
AP35	CAGING SWITCH (and shorting connector)	36 C–D
A3DS1	M61 SIGHT RETICLE LAMP	36B
A3DS2	M61 SIGHT READY-TO-FIRE INDICATOR	36B
	AZIMUTH INDICATOR ASSEMBLY	74, 75C
	GUNNER'S LIGHT ASSEMBLY	74, 75B

RELAYS AND THEIR FUNCTIONS

RELAY		FUNCTION
	DISTRIBUTION BOX (A1)	
A1K1	LOADING	Actuates loading motor A7A4 when loading motor switch A7A3S2 is actuated.
A1K2	SYSTEM POWER	Applies power to gun control and fire control circuits, and the inverter (A5).
A1K3	ACTION	Applies power to the GUN CLEAR switch A2A1S3, action switch command relay A21K22, and the TRIGGER Switch A2A4S2 circuitry.
A1K4	TURRET POWER	Applies power to the M157 mount control components.
A1K5	TRIGGER	Applies power to the gun motor brake A6A2L1, gun motor high relay A1K8, firing volts relay A1K6, and to the burst limit control circuitry.
A1K6	FIRING VOLTS	Applies firing voltage from the converter A1A3 to the firing (Volts) pin (firing contact assembly) A6A1.
A1K7	BURST LIMIT	Removes power from trigger relay A1K5 when energized by the burst limit circuitry (high rate firing). Deenergizes the gun motor high relay A1K8 when the gun motor has attained the proper low rate speed (low rate firing).
A1K8	GUN MOTOR HIGH	Applies power to A6A2 gun motor when energized by the action and trigger control circuits.
A1K9	TIME DELAY	Energizes gun motor low relay A1K10, thereby applying power to the gun motor during low rate firing. Also keeps A1K10 energized for a short time after trigger is released, thereby allowing the gun to clear.
A1K10	GUN MOTOR LOW	Applies 8.84 vdc to A6A2 gun motor during low rate firing.
A1K11	CLEARING	When energized, applies power to the declutching solenoid A6A3.

AR 905497

Figure S-39. Detailed interconnection diagram (sheet 2 of 20).

RELAYS AND THEIR FUNCTIONS - CONT.

RELAY		FUNCTION
A1K12	LAST ROUND (INOPERATIVE)	
A1K13	ELEVATION LOWER LIMIT	Normally energized, it allows normal cannon movement in elevation except when the mount drives into the -5° limit switch. However, if the cannon is over an open hatch, A1K13 will prevent cannon depression below 18°.
A1K14	ACQUISITION TIME DELAY	Energizes when the radar locks on a target then removes most of the azimuth and elevation tachometer feedback, thereby causing the mount and cannon to accumulate the lead angle at a very fast rate. Deenergizes when mount and cannon have accumulated the lead angle. The slew speed (A1K14 energized) is five times normal target tracking speed.
A1K15	RIGHT LIMIT	When deenergized by cannon moving into an open hatch from the right, it stops mount movement.
A1K16	LEFT LIMIT	When deenergized by cannon moving into an open hatch from the left, it stops mount movement.
A1K17	RADAR POWER	Energized in the radar, manual (MAN) or test modes, it applies 24 vdc primary power to radar power supply (unit 5) A25.
	SIGHT CURRENT GENERATOR (A21)	
A21K21	ELECTRICAL CAGE OFF	When this relay is not activated, the normally-closed position is connected such that the sight is electrically caged. When the relay is activated upon a command signal of the test mode, manual mode, or lockon signals, the relay removes electrical cage and applies a noncaging current.

RELAY		FUNCTION
A21K22	ACTION SWITCH COMMAND	Activates via contacts of action relay (A1K3) whenever the mode selector switch (A2A1S1) is positioned at RADAR, MAN, or TEST. In RADAR and TEST modes, supplies 24 vdc to foot switch (A24S1); in RADAR, MAN, and TEST modes, supplies 24 vdc to SCG; and in TEST mode, supplies 24 vdc to electrical cage off relay (A21K21).
A21K23	10-SECOND TIME DELAY	Allows 24 vdc to be applied to the external range control (A10), and 24 vdc to the reticle lamp A3DS1 ten seconds after application of system power. It also applies 19 vdc to the SCG power supply to generate the ± 15 vdc required for the SCG computing circuitry.
A21K24	SIGHT CAGE	Operates in the manual and external modes when the sight cage button is pressed. It removes magnet current to the sight and applies a current which will cage the sight.
A21K25	EXTERNAL MODE	When the MODE switch A2A1S1 switch is set at EXT, A21K25 is activated. When A21K25 is activated, the current supplying the M61 sight is switched from the current modules to the external range control A10.
A21K26	MANUAL MODE	When the MODE switch A2A1S1 is set at MAN, A21K26 is activated and switches the range and range rate input signals to the manually set range in range rate signals at the control panel.
A21K27	READY-TO-FIRE	Upon a command signal from the action switch, A21K27 is activated, which allows the ready-to-fire light A3DS2 to come on (after closure of the action switch) when the various ready-to-fire logic circuits have been completed.

AR 905498

Figure S-39. Detailed interconnection diagram (sheet 3 of 20).

A1 Distribution Box Test Points

The distribution box of the mount electronics has test points which monitor various signals within the unit. These various voltages are brought out to a common test jack (A1J5) readily accessible at the lower-left side of the distribution box. However, you can use cable W33 of the AN/MWM-3 Test Set as an extender cable for ease in taking the measurements. The following distribution box test point data list gives the signals measured and displays the test point symbol for the distribution box (A1).

A1 Distribution Box Test Point Data

Pin of A1J5	Zone	Signal or Voltage Measured
A	68C	+8.84 Vdc lo gun motor voltage
B	64C	Gun motor voltage A6A2: +24 Vdc in hi rate, +8.84 Vdc in lo rate
C	56H	+24 Vdc when burst limit relay A1K7 energized
D	52D	+24 Vdc fire pulse when action switch and trigger on control panel pressed (trigger signal to arm-safe switch or arming connector)
E	58D	+24 Vdc fire pulse to trigger relay A1K5 through arm-safe switch or arming connector
F	56J	+24 Vdc until burst limit circuit times down selected by BURST LIMIT switch on control panel (energizing voltage for burst LIMIT relay K7)
G	63D	(Not Used – Formerly 24 VDC to A1K12)
H	57D	+24 Vdc to release gun brake solenoid
J	56D	+24 Vdc to cut off ammo flow when clearing gun (clearing solenoid power)
K	84E	Lower limit of hatch protection reached (energizing voltage for lower limit relay K13)
L	101E	Right limit of hatch protection reached (energizing voltage for right limit relay K15)
M	86E	Left limit of hatch protection reached (energizing voltage for left limit relay K16)
N	67C	+8.84 lo gun motor voltage
P	53B	+24 Vdc when radar power relay A1K17 energized (system power to radar)
R	69B	Across plus side of VOLTS meter A1M2 (external power)
S	68J	+330 Vdc to firing contact when A1K6 energized (gun firing voltage)
T	81F	+24 Vdc for turret power enable relay A1K4
U	50B	115 Vac 400 Hz phase B from inverter A5
V	50B	115 Vac 400 Hz phase A from inverter A5
W	50B	115 Vac 400 Hz phase C from inverter A5
X	66C	+24 Vdc loading command input signal to A1K1

A1 Distribution Box Test Point Data - Continued

Pin of A1J5	Zone	Signal or Voltage Measured
Y	50E	+24 Vdc system power through A1CB2
Z	68C	+24 Vdc gun motor voltage
a	85F	Acquisition time delay relay enable voltage for A1K14
b	50G	+24 Vdc auto gun clear pulse through action relay A1K3
c	52B	115 Vac 400 Hz single phase from inverter
d	52C	115 Vac 400 Hz single phase return
e	69B	Ground
f	58H	(Not Used – Formerly 24 VDC to A1K12)
g	68F	+24 Vdc to clearing time delay circuits
h	65B	+24 Vdc pulse to hi gun motor A1K8, pulse duration depends on burst limit selected
i	66B	+24 Vdc while loading relay A1K1 energized (loading motor power)
j	64C	+24 Vdc to low gun motor relay A1K10
k	51E	+24 Vdc system power input from control panel to A1K2
m	55C	+330 Vdc firing voltage from converter A1A3
n	58F	+24 Vdc while clearing relay A1K11 not energized
p	54E	+24 Vdc to energize firing volts relay A1K6 time delay (+24 Vdc = relay K6 deenergized)
q	57G	+24 Vdc until lo time delay expires to permit gun to accelerate rapidly at first
r	58H	Not Used
s	58G	+24 Vdc to trigger relay A1K5: pulse with A1K7 energized in hi rate constant in lo rate as long as trigger held
t	56G	+24 Vdc starts lo time delay circuit for energizing time delay relay A1K9 High gun motor relay K8 energized before burst limit)

AR907951

Figure S-39. Detailed interconnection diagram (sheet 5 of 20).

A2 CONTROL PANEL
COMPONENT REFERENCE LIST

A2 CONTROL PANEL INDICATORS		ZONE
A2A1DS1	SYSTEM POWER	130F
A2A1DS2	GUN POWER	130F
A2A1DS3	GOOD WHEN LIT	126F
A2A1DS4	READY WHEN LIT	126G
A2A1DS5	LOW VOLTAGE WARNING	131G

A2 CONTROL PANEL SWITCHES		ZONE
A2A1S1	MODE SELECTOR SWITCH	
	DECK A	127, 128D
	DECK B	129-131D
	DECK C	137-139C
A2A1S2	GUN POWER SWITCH	136E
A2A1S3	GUN CLEAR SWITCH	140C
A2A1S4	FIRING RATE BURST LIMIT SWITCH	140-143H
A2A1S5	SYSTEM POWER SWITCH	130E
A2A1S6	RIGHT LIMIT SWITCH	138D
A2A1S7	LEFT LIMIT SWITCH	138D
A2A1S8	LOW VOLTAGE TEST/ OVERRIDE SWITCH	132H
A2A3S1 AND	ACTION SWITCHES	128E
A2A4S1		128F
A2A3S2	SIGHT CAGE BUTTON	127E
A2A4S2	TRIGGER SWITCH	129H

A2 CONTROL PANEL		ZONE
A2A1G1	AZ AIDED LAYING TACH	143B
A2A1M1	ROUNDS COUNTER	141B
A2A1R1	SIGHT LAMP (M61) POT	130B
A2A1R2	FIXED RESISTOR	129B
A2A1R3	RANGE POT	126E
A2A1R4	TARGET SPEED POT	126F
A2A1R5	100 ROUND BURST POT	140H
A2A1R6	60 ROUND BURST POT	140G
A2A1R7	30 ROUND BURST POT	140G
A2A1R8	10 ROUND BURST POT	141G
A2A1R9	LO RATE POT	142G
A2A1R10	AZ HAND CONTROL POT	140D
A2A2G1	EL AIDED LAYING TACH	130H
A2A2R1	EL HAND CONTROL POT	136G

A2 Control Panel Test Points

Test points on the control panel permit you to monitor various input and output signals of the control panel. These signals are brought out to a common test jack (A2J5) for measurement. This test jack is located at the bottom right front, next to A2J2. For ease in making the specified measurements, you can use cable W31 of the **AN/MWM-3 Test Set as an** extender cable. The following control panel test point data list gives the signals measured and displays the test point symbol for the control panel (A2).

A2 Control Panel Test Point Data

Pin of A2J5	Zone	Signal or Voltage Measured
A	130B	+24 Vdc for sight reticle brightness circuit
B	129C	Manual mode selected for sight current generator
C	129D	+24 Vdc system power input to switch
D	137F	Elevation control
E	126K	External mode ready to fire command input to sight current generator
F	138G	Elevation control
G	125D	Sight cage command from hand grip
H	137F	Elevation control
J	125K	External mode range estimate input to sight current generator
K	142D	Azimuth control
L	128H	115 Vac 400 Hz single phase return from inverter via distribution box
M	139D	Azimuth control
N	128H	115 Vac 400 Hz single phase from inverter via distribution box
P	139D	Azimuth control
R	142B	Rounds remaining decrement voltage pulse
S	126C	+24 Vdc to 10-second delay circuit in sight current generator
T	128B	+24 Vdc to energize radar power in distribution box
U	128G	+24 Vdc when action switches closed to sight current generator
V	130K	+24 Vdc trigger voltage to firing circuit
W	130K	+24 Vdc trigger voltage in from distribution box
X	137D	System power input to control panel
Y	125E	Manual range voltage to sight current generator
Z	126F	Manual target speed voltage to sight current generator
a	126K	Cannon elevation less than 80° for ready-to-fire circuit
b	140J	Firing rate burst limiting output to distribution box
c	138J	Firing rate burst limit circuit input voltage

AR 907952

Figure S-39. Detailed interconnection diagram (sheet 6 of 20).

A1 DISTRIBUTION BOX
COMPONENT REFERENCE LIST

A1 DISTRIBUTION BOX		ZONE
K1	LOADING	67B
K2	SYSTEM POWER	51,52E
K3	ACTION	53G-J
K4	TURRET POWER	81D,E
K5	TRIGGER	54G
K6	FIRING VOLTS	54C
K7	BURST LIMIT	55G-J
K8	GUN MOTOR HIGH	65B
K9	TIME DELAY	56F
K10	GUN MOTOR LOW	64B
K11	CLEARING	58F
K12	LAST ROUND (INOPERATIVE)	58G,H
K13	ELEVATION LOWER LIMIT	83,84E
K14	ACQUISITION TIME DELAY	85E
K15	RIGHT LIMIT	82G
K16	LEFT LIMIT	84,85G
K17	RADAR POWER	53B

A1 DISTRIBUTION BOX COMPONENTS		ZONE
A3	CONVERTER	56B
A4	FILTER	50F,G
C1		62B
C2		55B
C3		81D
CB1	SCG POWER	51F
CB2	SYSTEM POWER	53E
CB3	INVERTER POWER	51E
CB4	SIGHT GYRO POWER	51B
CB6		82D
CB7		82D
CB8		82D
CR1		69D
CR2		69C
CR3		67C
CR4		57B
CR5		56B
CR6		66B
M1	AMPS	69C
M2	VOLTS	69C
M3	ELAPSED TIME INDICATOR	50F
R1	SHUNT	70C
R2		63B
R3		55C
R4		55B
S1	NORM-STATIC-TEST SWITCH	82D,E

AR 905499

Figure S-39. Detailed interconnection diagram (sheet 4 of 20).

A21 SIGHT CURRENT GENERATOR RELAY REFERENCE LIST

A21K21
ELECTRICAL CAGE OFF

CONTACT	ZONE
COIL	42F
A	25F
B	25H

A21K22
ACTION SW COMMAND

CONTACT	ZONE
COIL	41D
A	19G
B	9J
C	10D
D	41D

A21K23
10-SEC TIME DELAY

CONTACT	ZONE
COIL	40D
A	40C
B	27D
C	40C
D	40D

A21K24
SIGHT CAGE

CONTACT	ZONE
COIL	32G
A	32F
B	41F
C	32F

A21K25
EXTERNAL MODE

CONTACT	ZONE
COIL	33D
A	27E
B	29G
C	34E
D	32D
E	32D
F	31D

A21K26
MANUAL MODE

CONTACT	ZONE
COIL	31F
A	31F
B	10F
C	10H
D	12H
E	10G
F	10G

A21K27
READY-TO-FIRE

CONTACT	ZONE
COIL	41D
A	41D

A21 Sight Current Generator Test Points

The sight current generator is provided with test points that monitor the various signals in the unit. These signals are brought out to a common test jack (A21J7) readily accessible on the side of the unit. However, you may use cable W32 of the AN/MWM 3 (OMTS) as an extender cable for ease in taking the measurements. The following sight current generator test point data list gives the signals measured and displays the test point symbol for the sight current generator (A21).

A21 Sight Current Generator Test Point Data

(NOTE: Test points displayed on figure S-38 are identified with zone designation in this list. Other test points are referenced to an appropriate figure number.)

Pin of A21J7	Zone	Signal or Voltage Measured
A	19G	115 Vac 400 Hz
B	19G	115 Vac 400 Hz return
C	33F	+24 Vdc (to 10-second time delay K23 excitation)
D	21F	λ^2T from antenna traverse circuit
E	19E	λ^2E from antenna elevation circuit
F	40G	Radar lock on signal (track) (OV = LOCKON; 15V = NO LOCKON)
G	29E	Radar encountering ECM (ECM = OV; NO ECM = +13V)
H	9G	-10 Vdc inbound range rate reference signal from radar
J	9F	+10 Vdc outbound range rate reference signal from radar
K	10H	+20 Vdc range reference signal
L	10E	Radiate command from foot switch to radar (+24V to radiate)
M	40G	Radar 2-minute time delay expired signal (Radar ready: +24V when on)
N	29D	Azimuth phase A synchro test point
P	29D	Azimuth phase B synchro test point
R	30D	Azimuth phase C synchro test point
S	29D	Elevation phase A synchro test point
T	29D	Elevation phase B synchro test point
U	29D	Elevation phase C synchro test point
V	34D	Sight torque motor feedback signal f(I_T)
W	33E	Sight magnet current feedback signal f(I_M)
X	9E, H	Ground
Y	26E	-15 Vdc
Z	35H	+15 Vdc
a	17E	Cosine of elevation signal from Cos E potentiometer
b	40C	Ready-to-fire signal to sight lamp (OV when on)
c	19E	$\lambda^3 E I_M^2$ torque current (second term)
d	33G	Sight cage command signal (+24V to sight cage A21K24)
e	41D	Ready-to-fire relay A21K27 actuation signal (+24V with action switch)

Sight synchro 0-90V RMS, 400 H_z

AMC84-1083

Figure S-39. Detailed interconnection diagram (sheet 7 of 20).

A21 Sight Current Generator Test Point Data - Cont.

Pin of A21J7	Zone	Signal or Voltage Measured
f	Fig S-15	Range is less than 2200 meters signal for ready-to-fire = +15 Vdc
g	Fig S-10	Sight magnet current module VI_M input (0 to +13 Vdc)
h	Fig S-12	Sight torque current module VI_T input (-13 to +13 Vdc)
i	Fig S-10	Range air density reference voltage (-3.4 Vdc)
j	Fig S-10	Muzzle velocity (MV) magnet current fifth term
k	Fig S-10	Muzzle velocity (MV) magnet current fifth term
m	Fig S-10	+1/RN magnet current first term
n	Fig S-10	$-\lambda^2/R$ magnet current fourth term
p	Fig S-12	Super elevation (SUPER EL) torque current third term
q	Fig S-10	Divider reference
r	Fig S-10	Buffered range reference (+R')
s	Fig S-10	$+\mathring{R}/R^2$ magnet current third term
u	Fig S-10	$-\mathring{R}/R$ magnet current second term
v	41C	Test mode low calibration signal (GO = 15Vdc, NOGO = 0)
w	41C	Test mode high calibration signal (GO = 15Vdc, NOGO = 0)
x	10G, S-10	Range signal from radar (Range input to sight current generator)
y	Fig S-14 Fig S-15	Range signal (buffered) 0.834 (Range input)
z	28G	+24 Vdc acquisition time delay pulse from A1K14
AA	10F S-10	Range rate signal from radar (Range rate input signal to sight current generator)
BB	20E, Fig S-12	$+KI_M^2$ signal to the λ^3 pot
CC	Fig S-15	Acquisition time delay signal
DD	Fig S-19	Sight magnet current feedback fI_M (buffered)

Pin of A21J7	Zone	Signal or Voltage Measured
EE	Fig S-12	$-KI_M^2\lambda^2$ signal (input to amplifier for λ_E pot excitation)
FF	Fig S-10 Fig S-15	λ^2 signal from antenna
GG	Fig S-12	26 V P-P serrasoid (AC)
HH	32F	Sight cage command from hand grip (+24 Vdc when sight caged)

Figure S-39. Detailed interconnection diagram (sheet 8 of 20).

AR907955

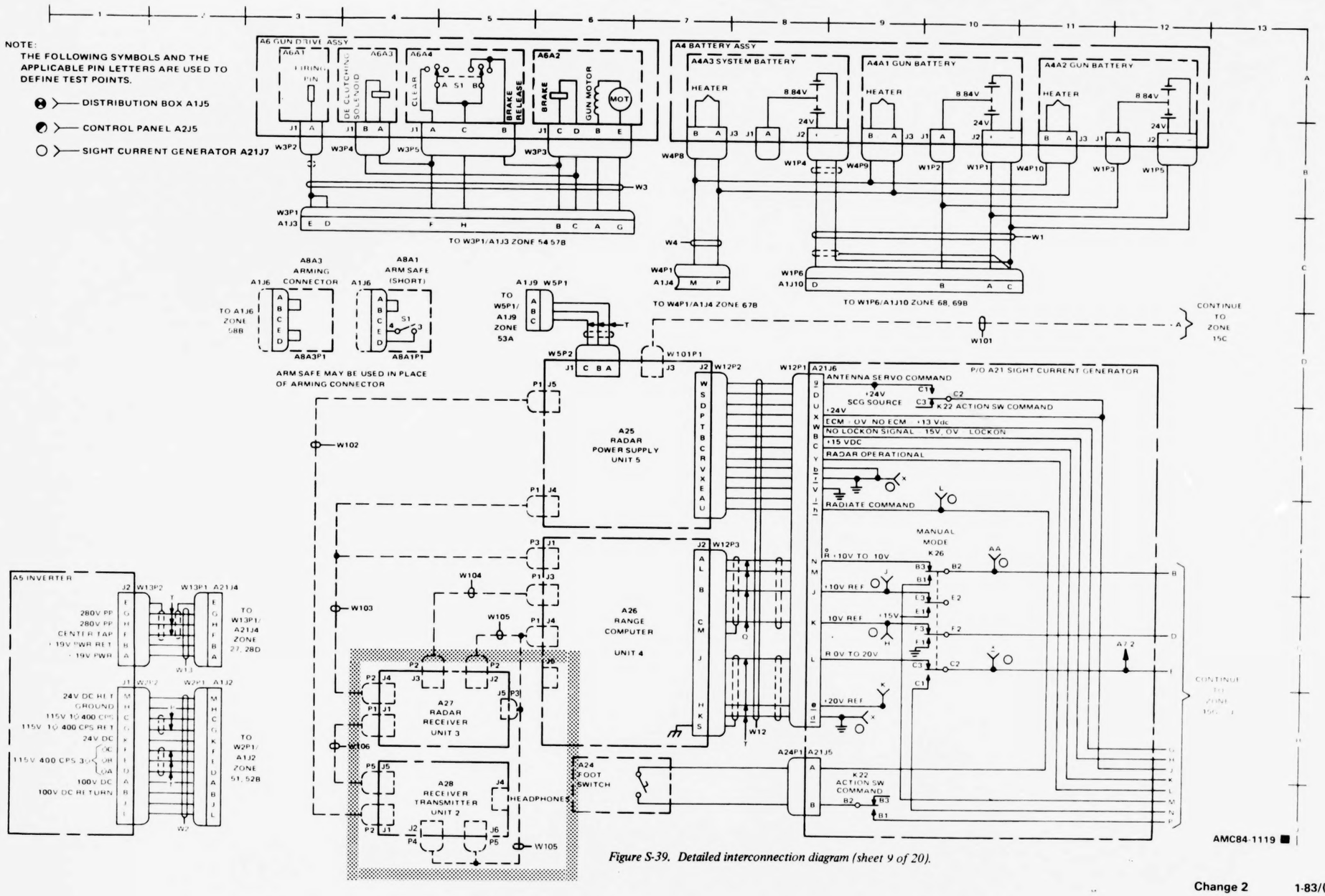

Figure S-39. Detailed interconnection diagram (sheet 9 of 20).

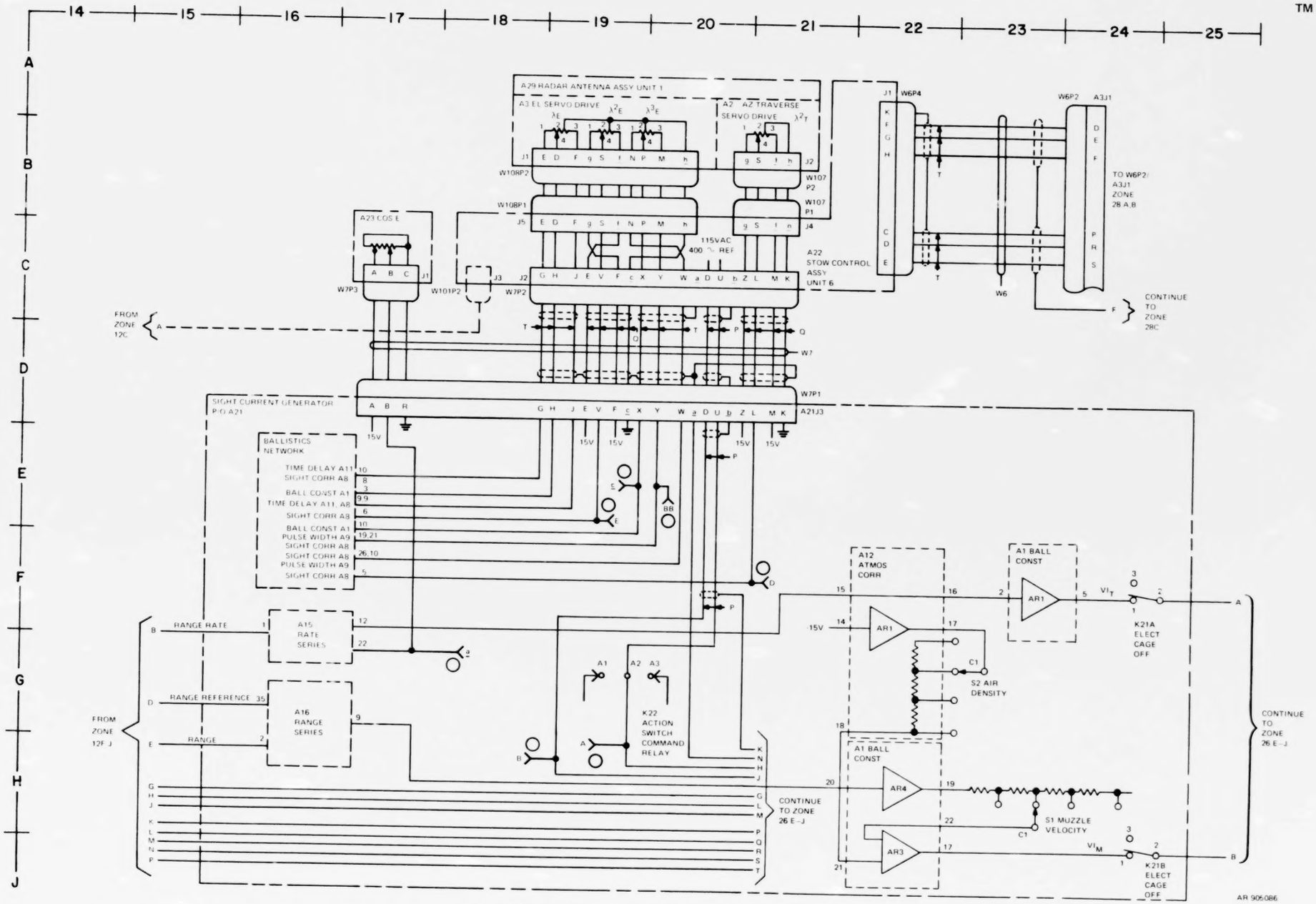

Figure S-39. Detailed interconnection diagram (sheet 10 of 20).

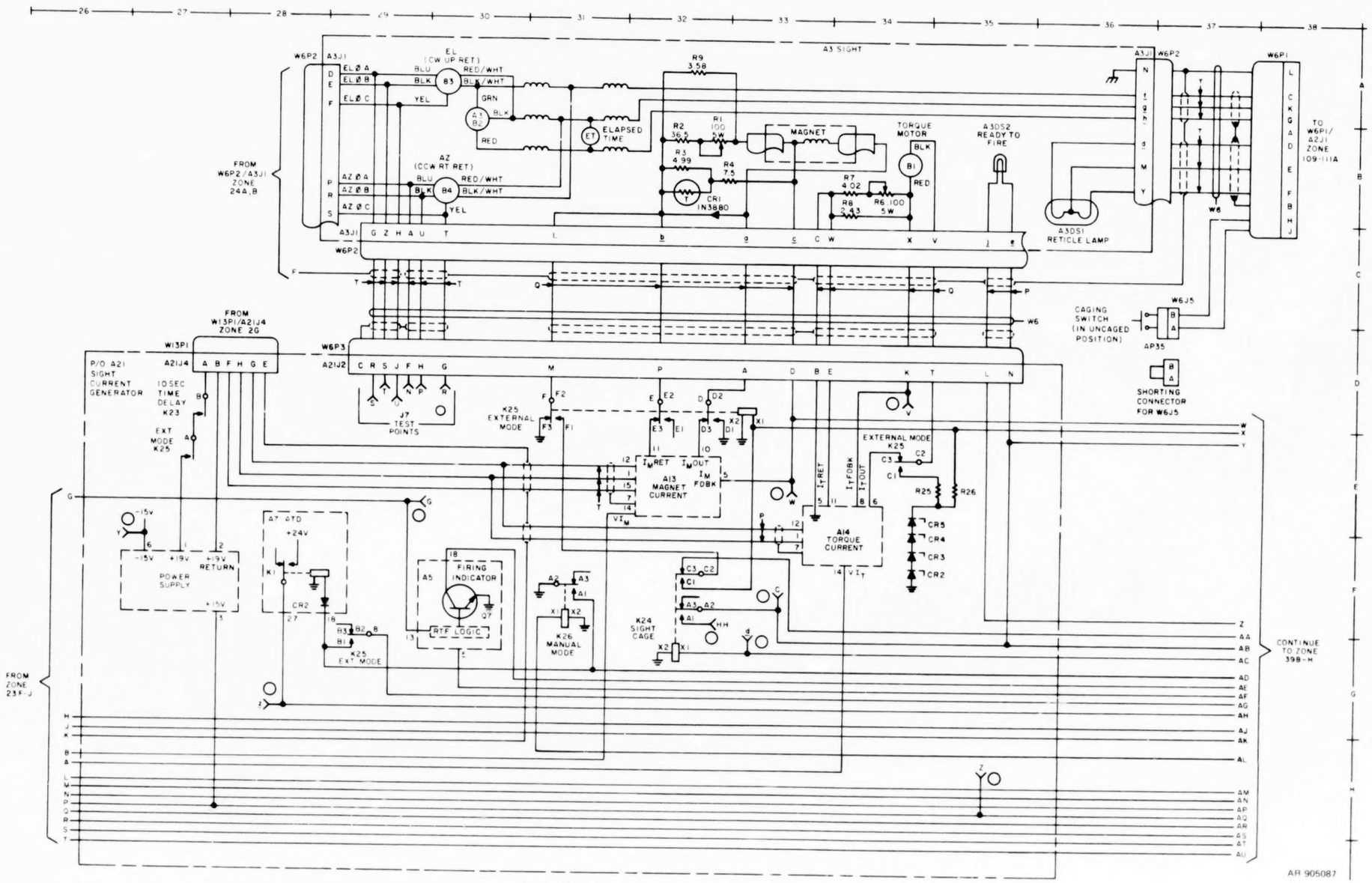

Figure S-39. Detailed interconnection diagram (sheet 11 of 20).

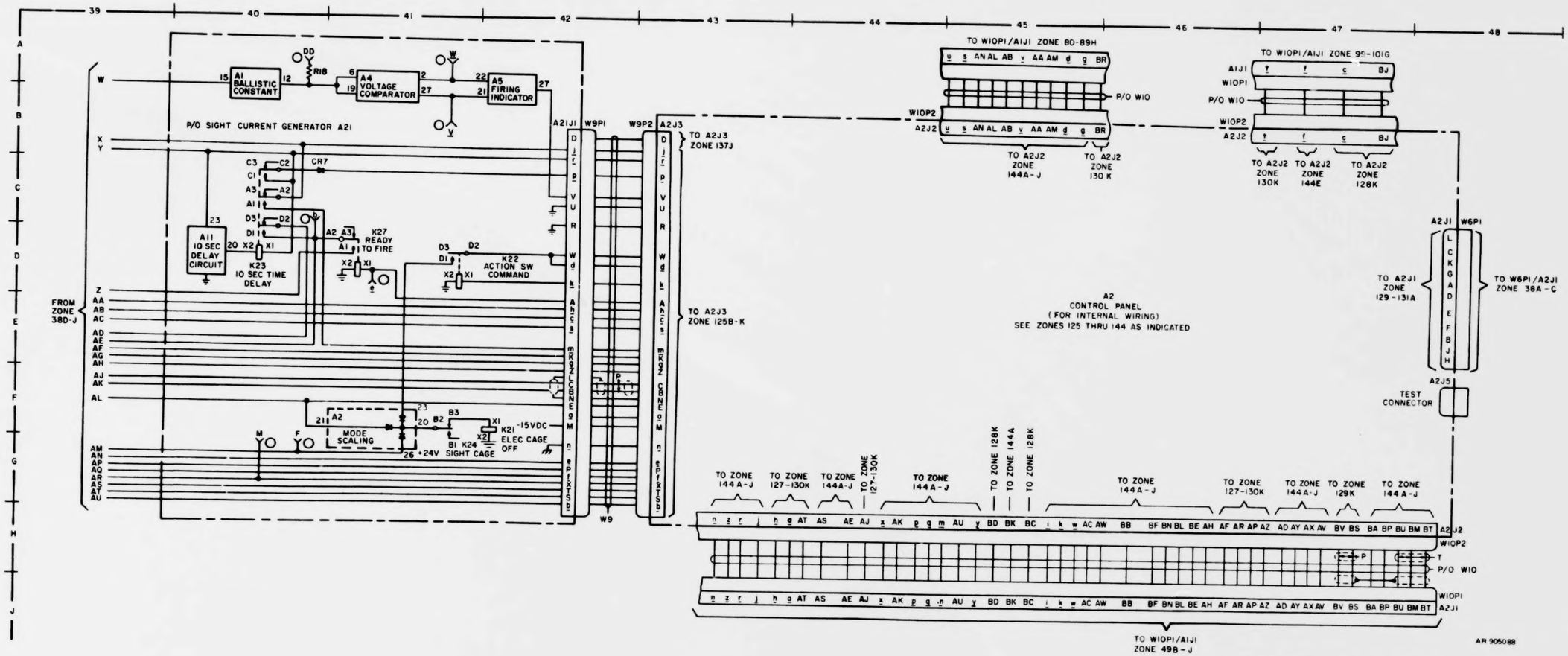

Figure S-39. Detailed interconnection diagram (sheet 12 of 20).

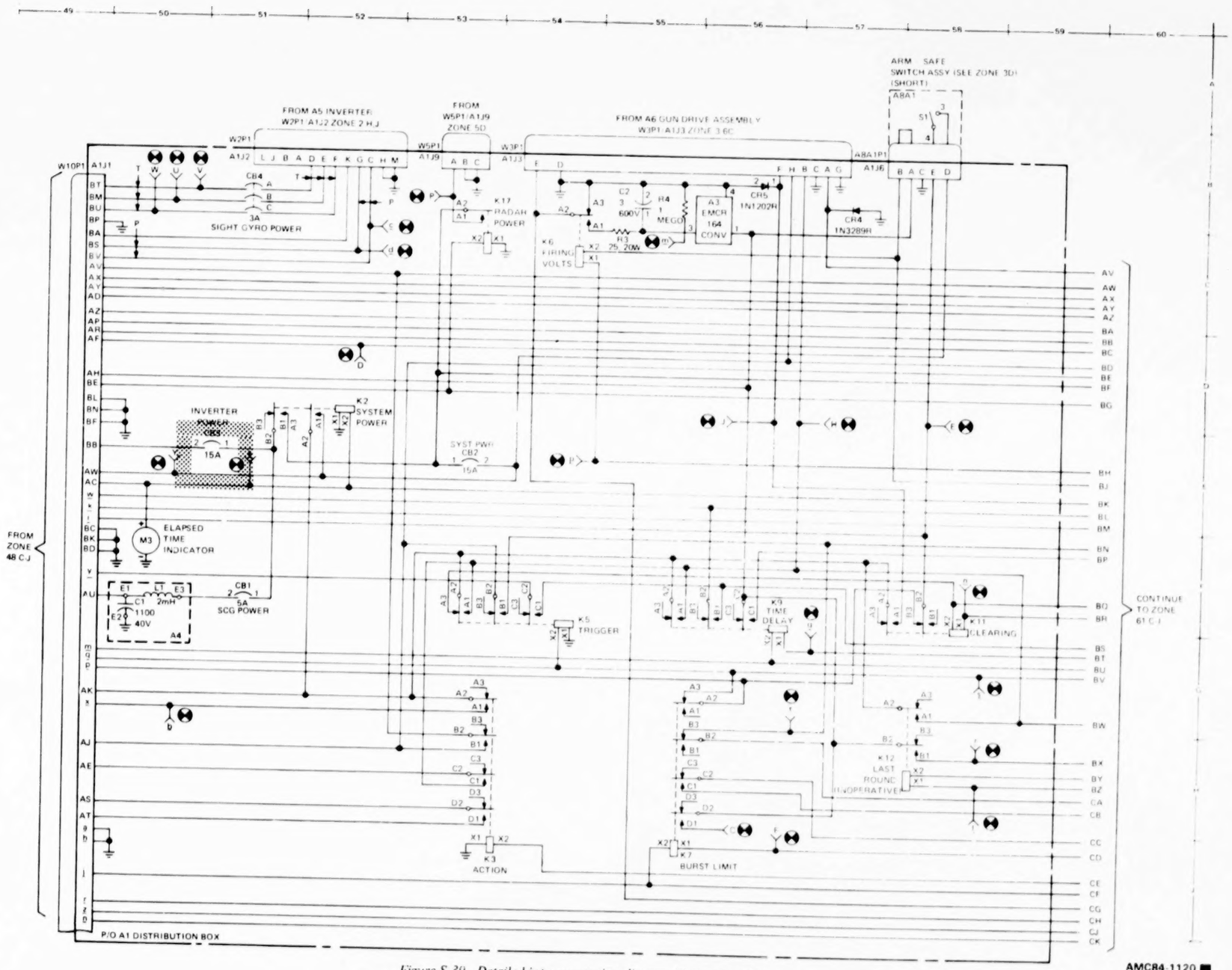

Figure S-39. Detailed interconnection diagram (sheet 13 of 20).

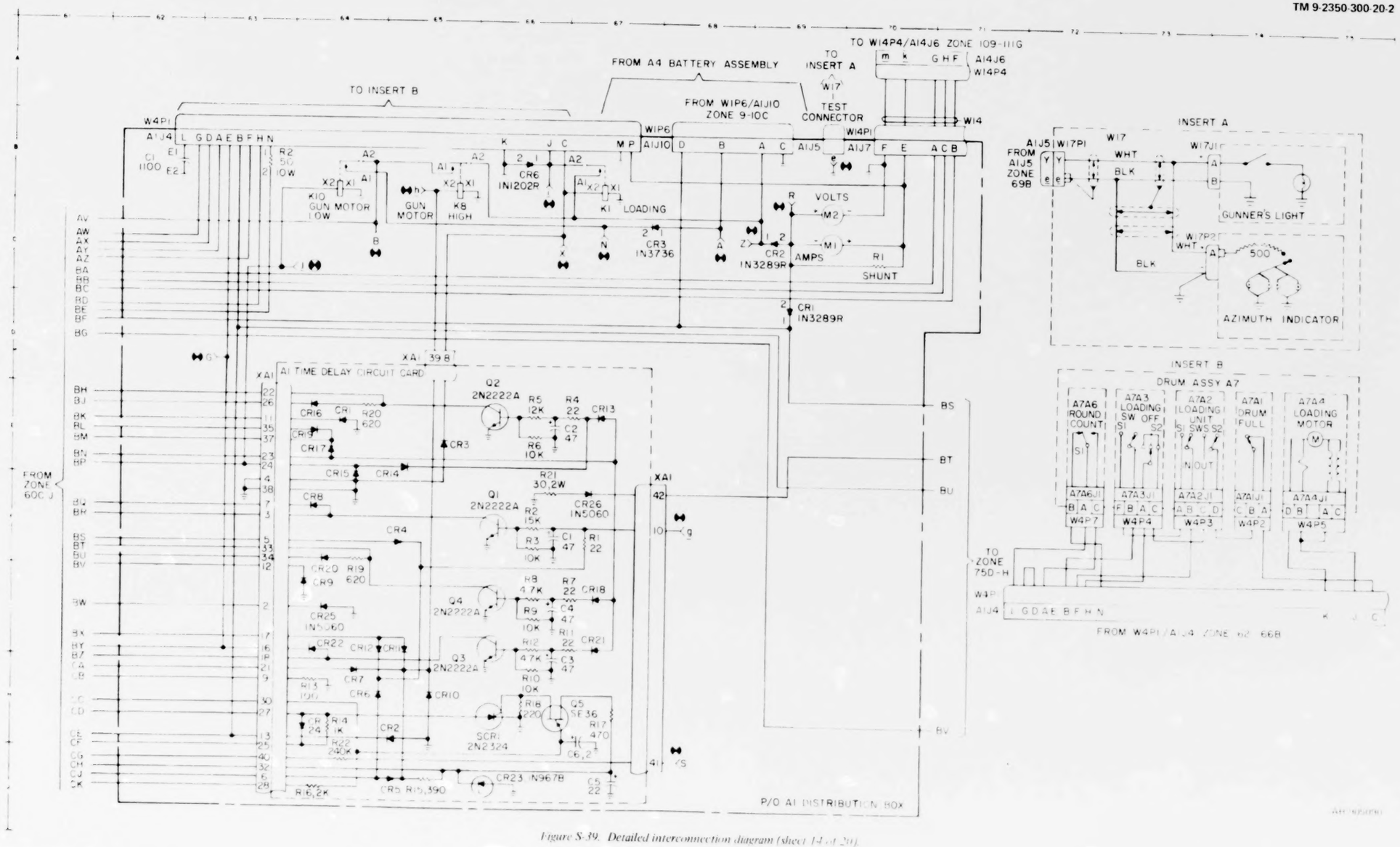

Figure S-39. Detailed interconnection diagram (sheet 14 of 20).

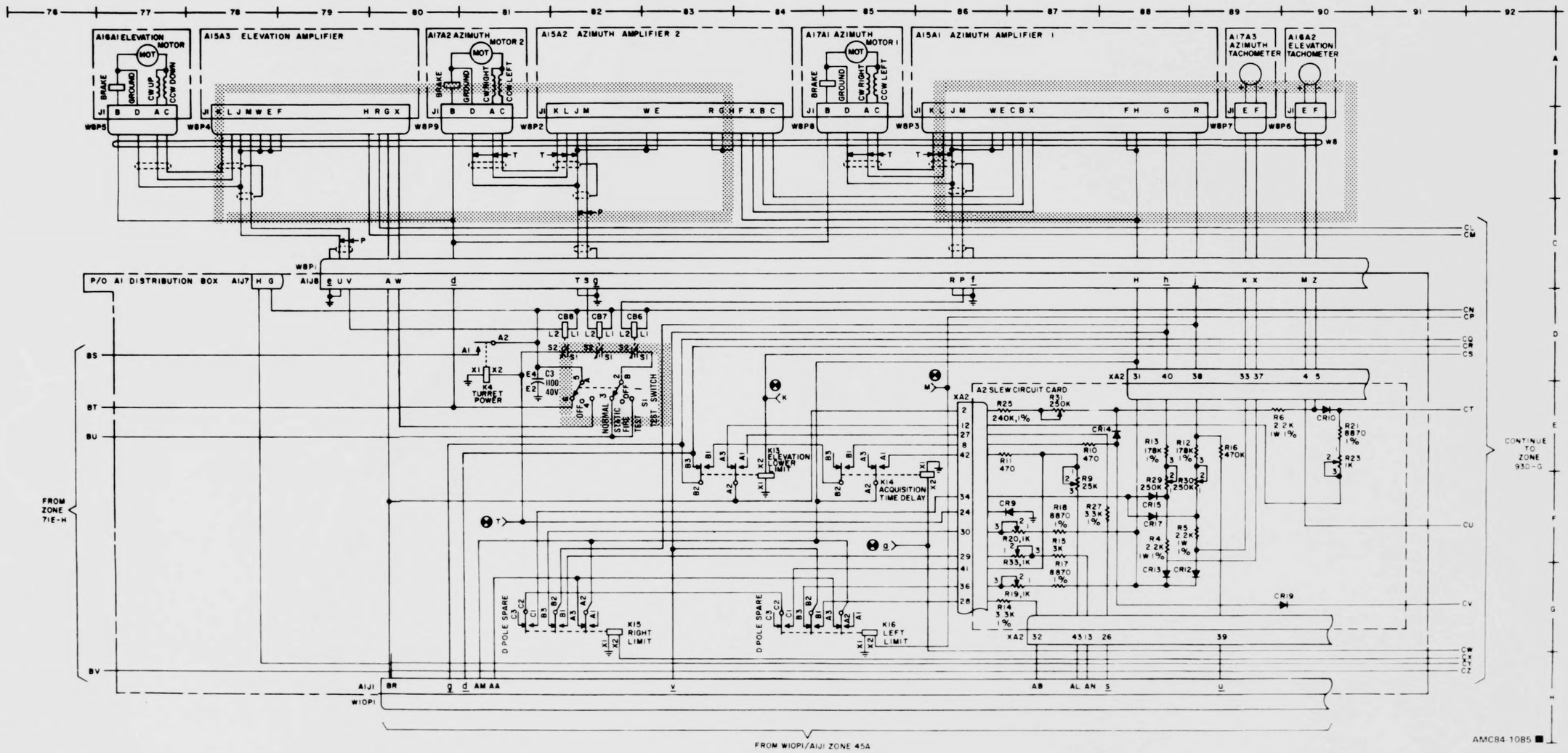

Figure 3-39. Detailed interconnection diagram (sheet 15 of 20).

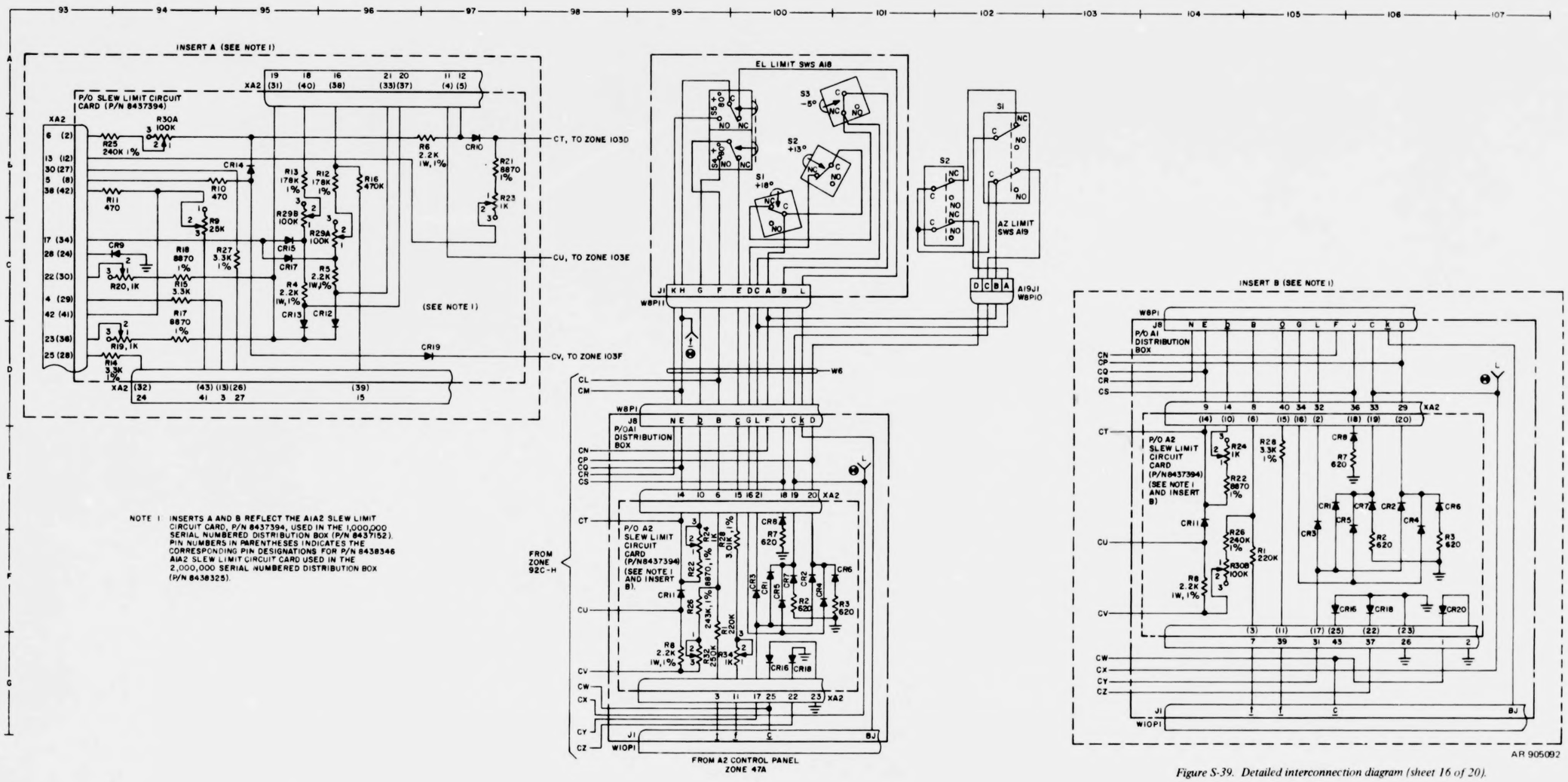

NOTE 1 INSERTS A AND B REFLECT THE A1A2 SLEW LIMIT CIRCUIT CARD, P/N 8437394, USED IN THE 1,000,000 SERIAL NUMBERED DISTRIBUTION BOX (P/N 8437152). PIN NUMBERS IN PARENTHESES INDICATES THE CORRESPONDING PIN DESIGNATIONS FOR P/N 8438346 A1A2 SLEW LIMIT CIRCUIT CARD USED IN THE 2,000,000 SERIAL NUMBERED DISTRIBUTION BOX (P/N 8438325).

Figure S-39. Detailed interconnection diagram (sheet 16 of 20).

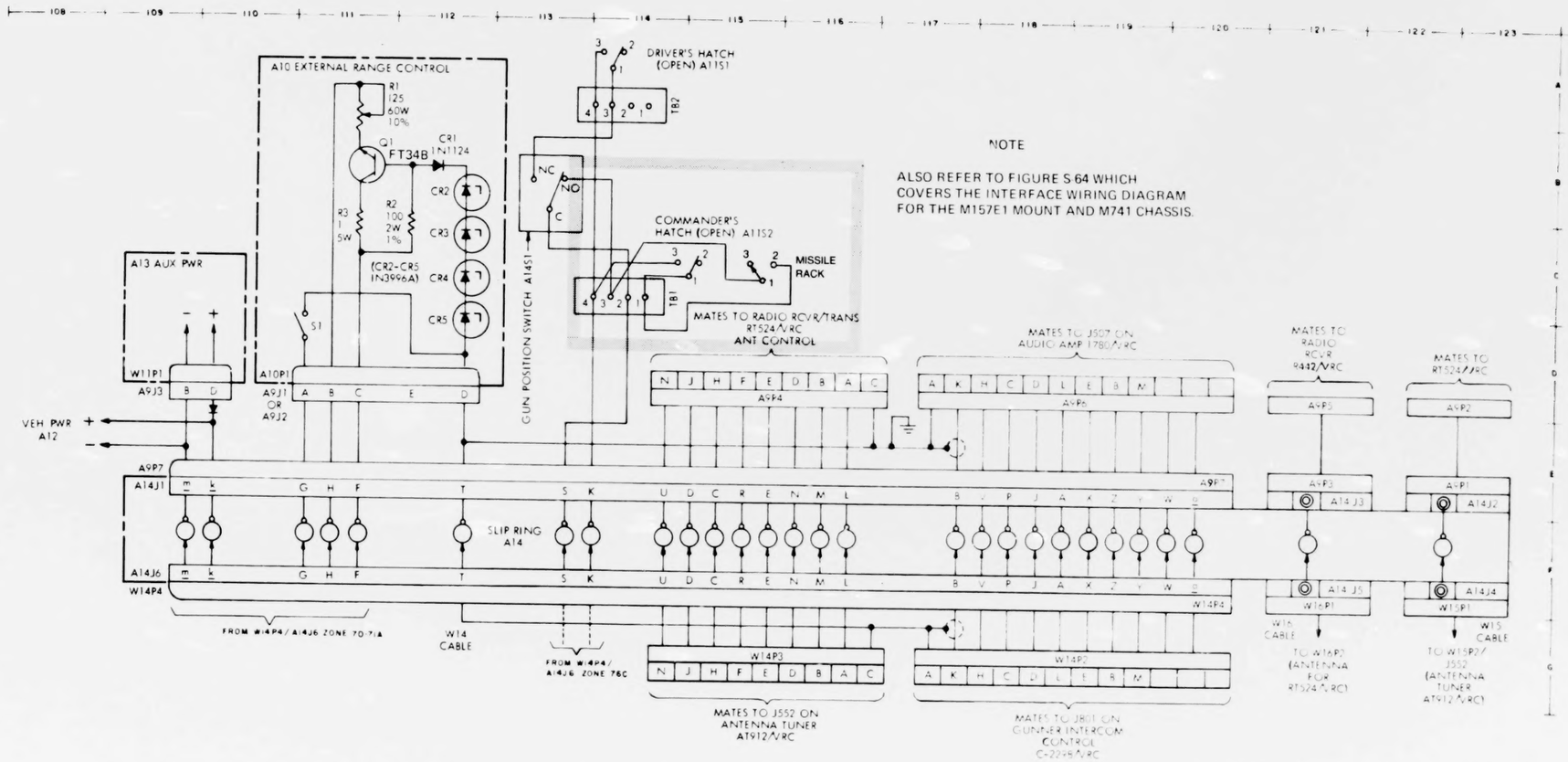

Figure S-39. Detailed interconnection diagram (sheet 1 of 20).

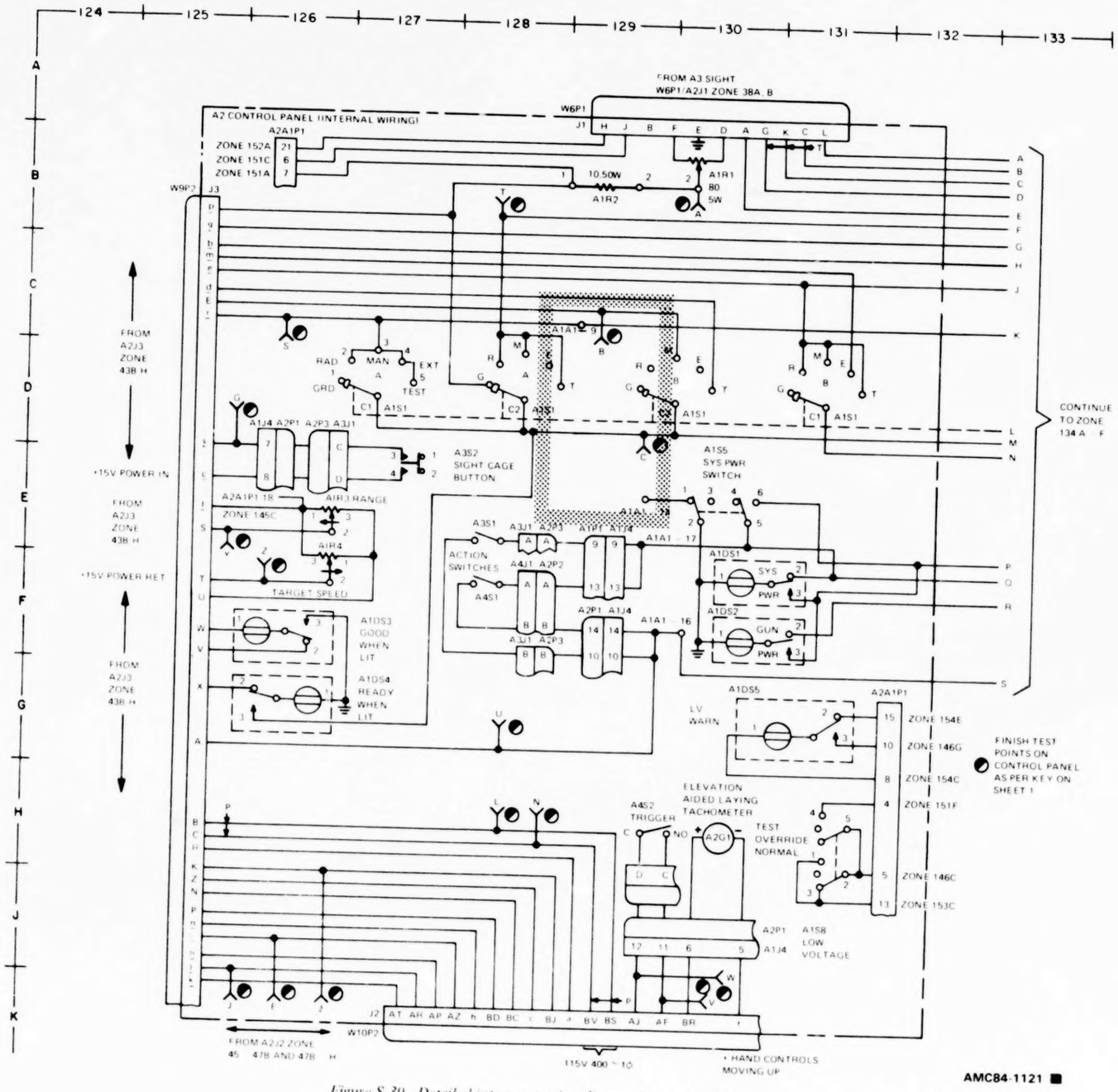

Figure S-39. Detailed interconnection diagram (sheet 18 of 20).

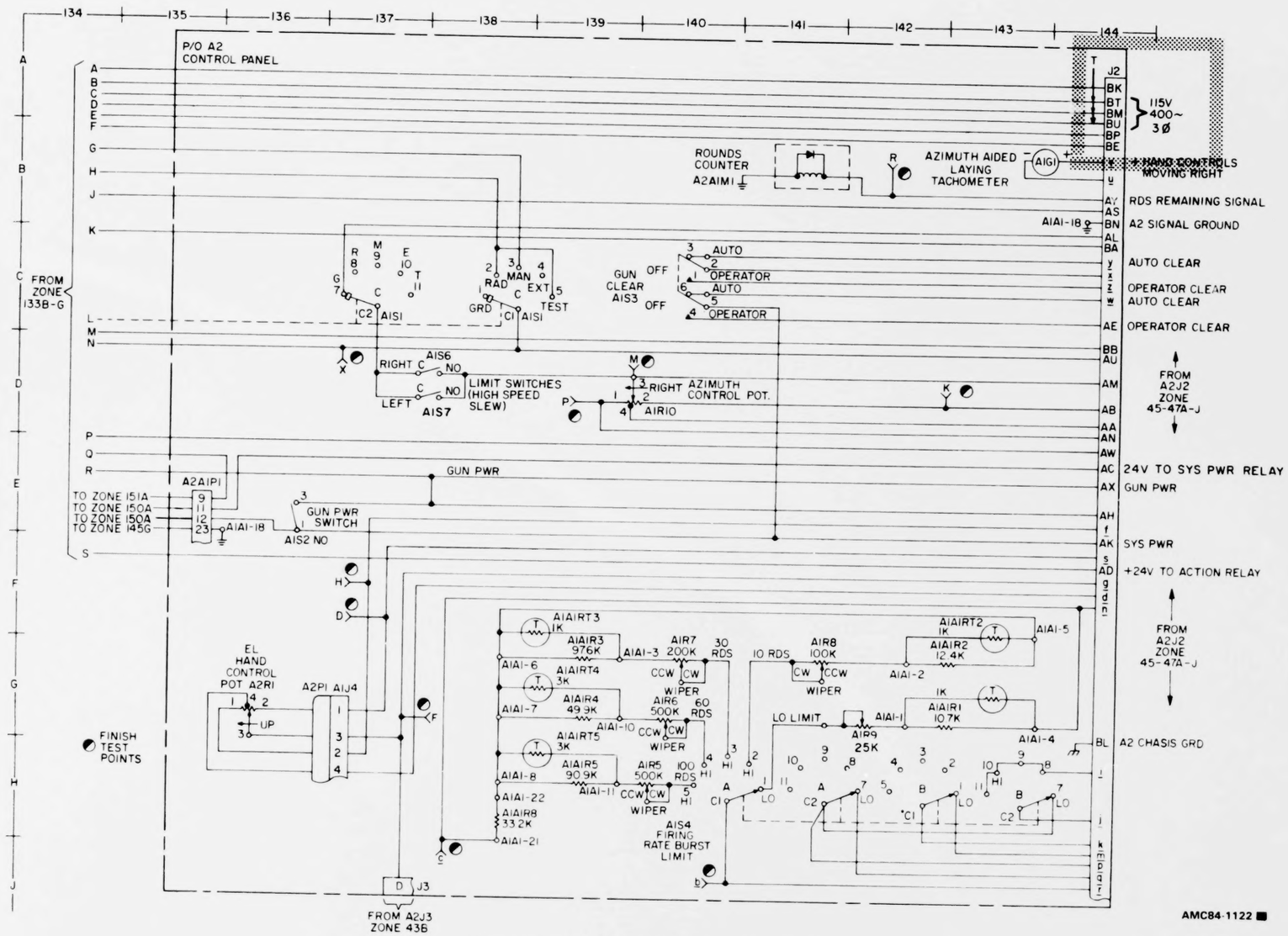

Figure S-39. Detailed interconnection diagram (sheet 19 of 20).

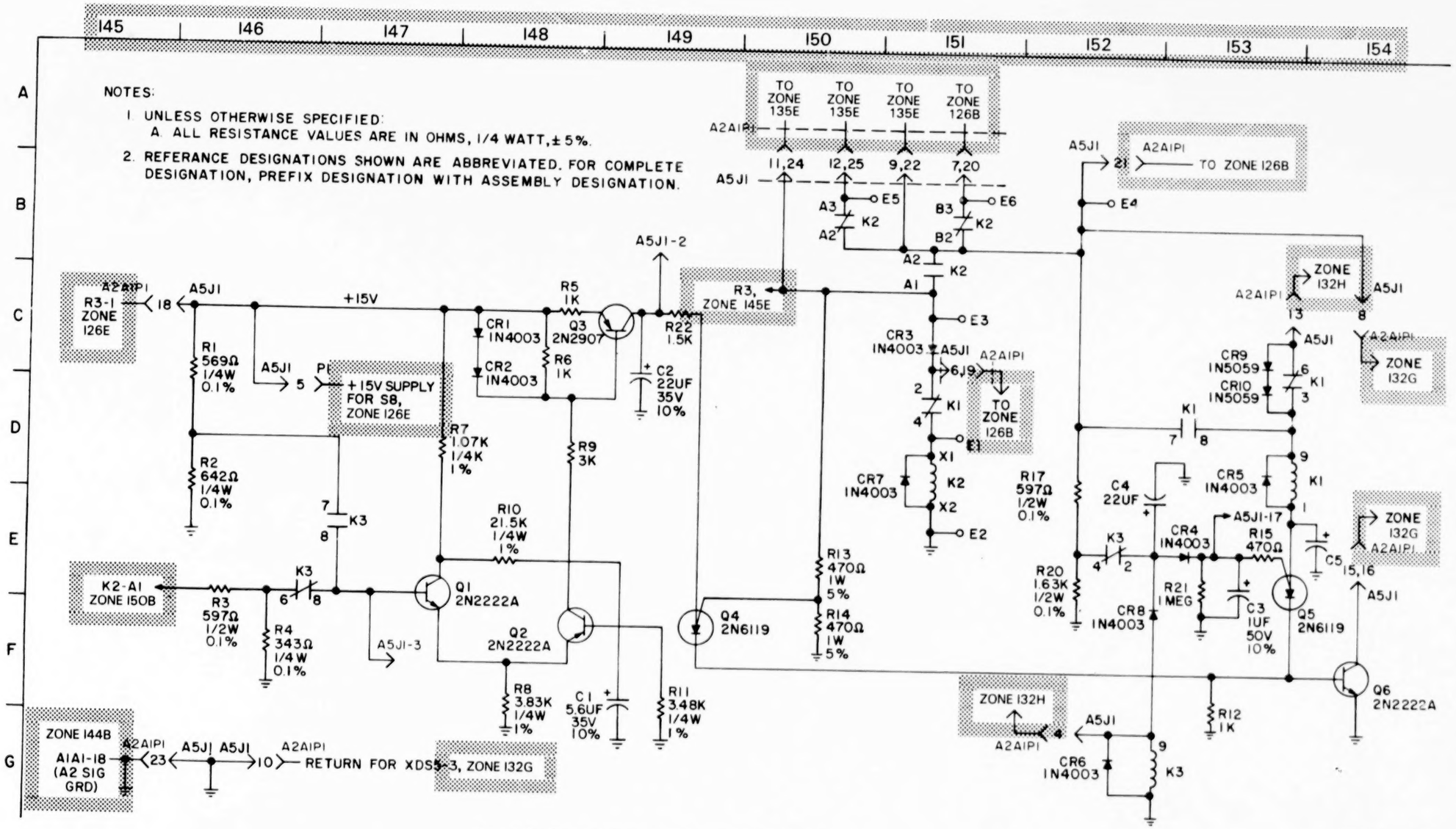

Figure S-39. Detailed interconnection diagram (sheet 20 of 20).

AMC84-1123

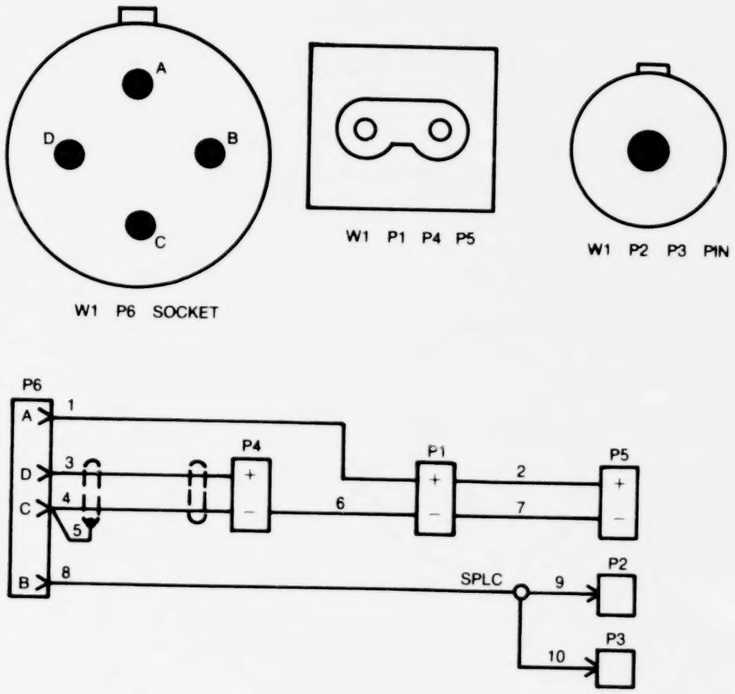

Figure S-40. Cable assembly W1 wiring diagram. ■

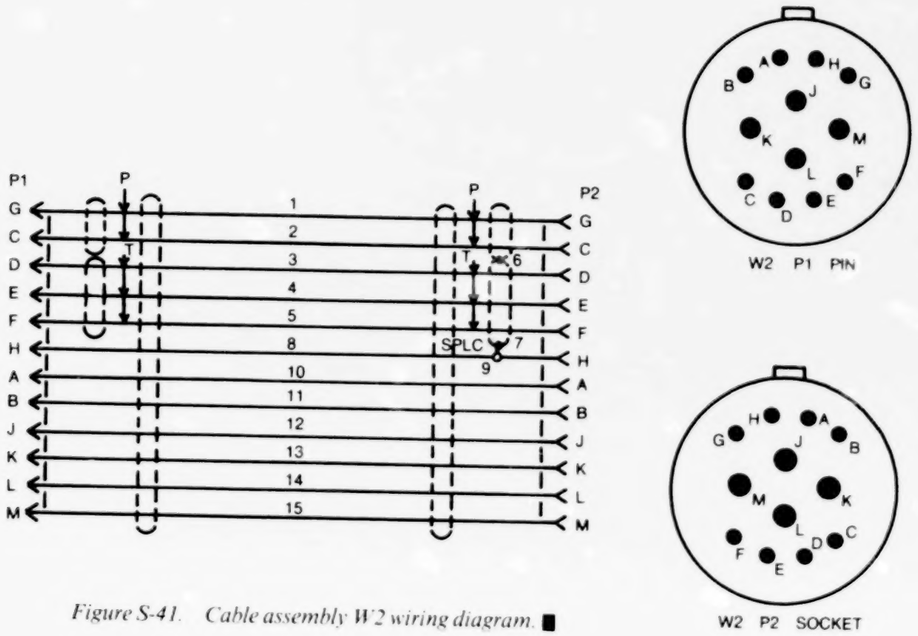

Figure S-41. Cable assembly W2 wiring diagram. ■

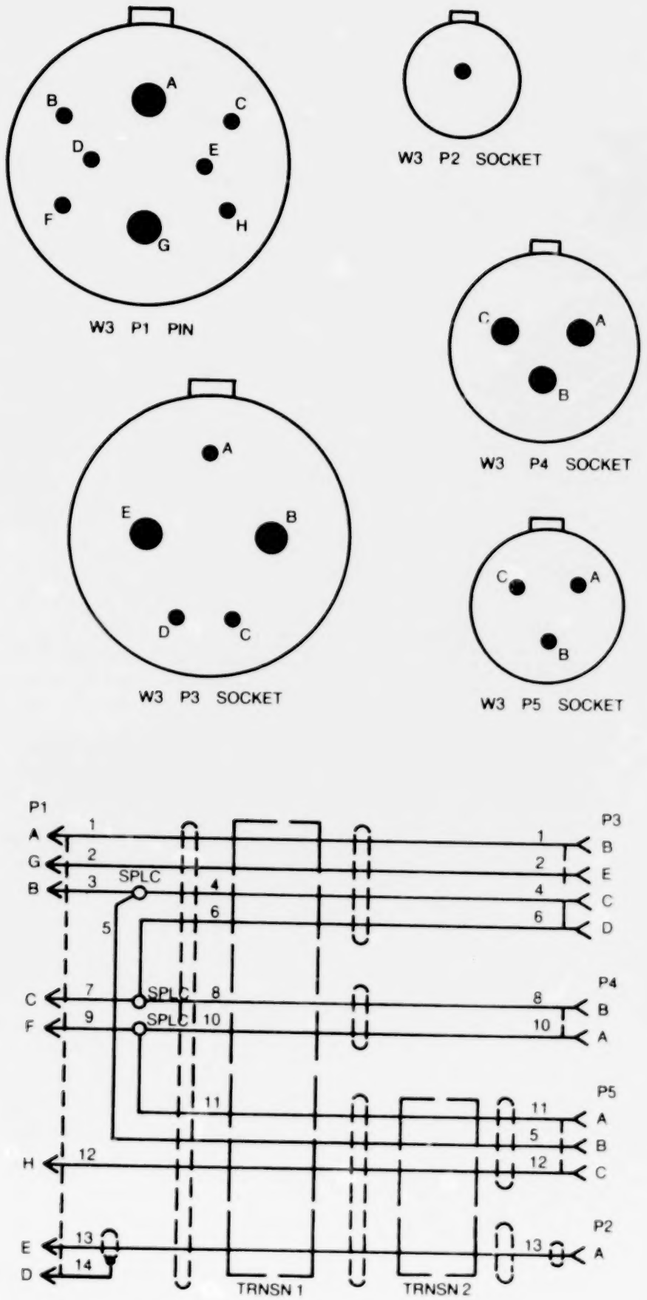

Figure S-42. Cable assembly W3 wiring diagram. ■

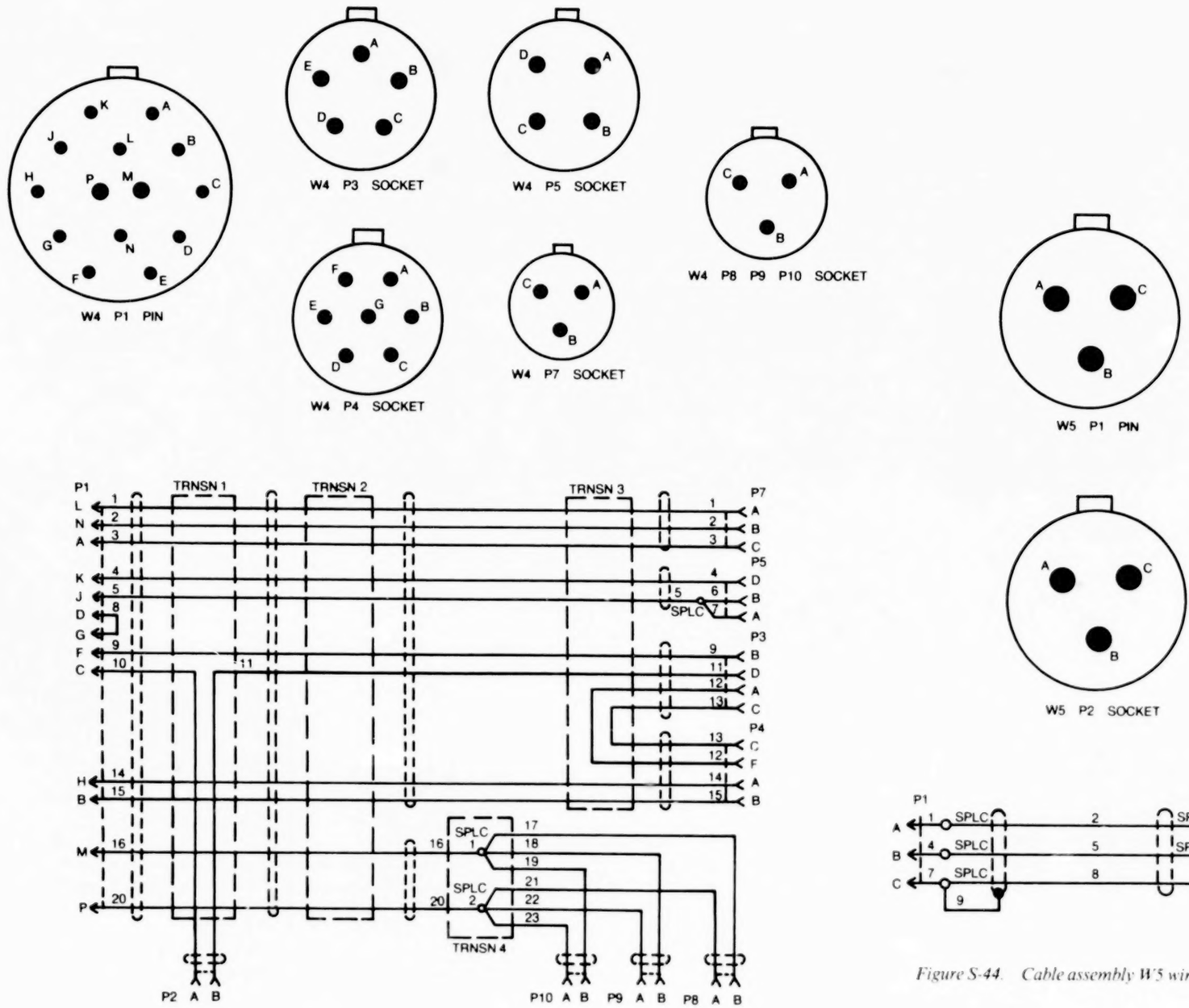

Figure S-43. Cable assembly W4 wiring diagram. ■

Figure S-44. Cable assembly W5 wiring diagram. ■

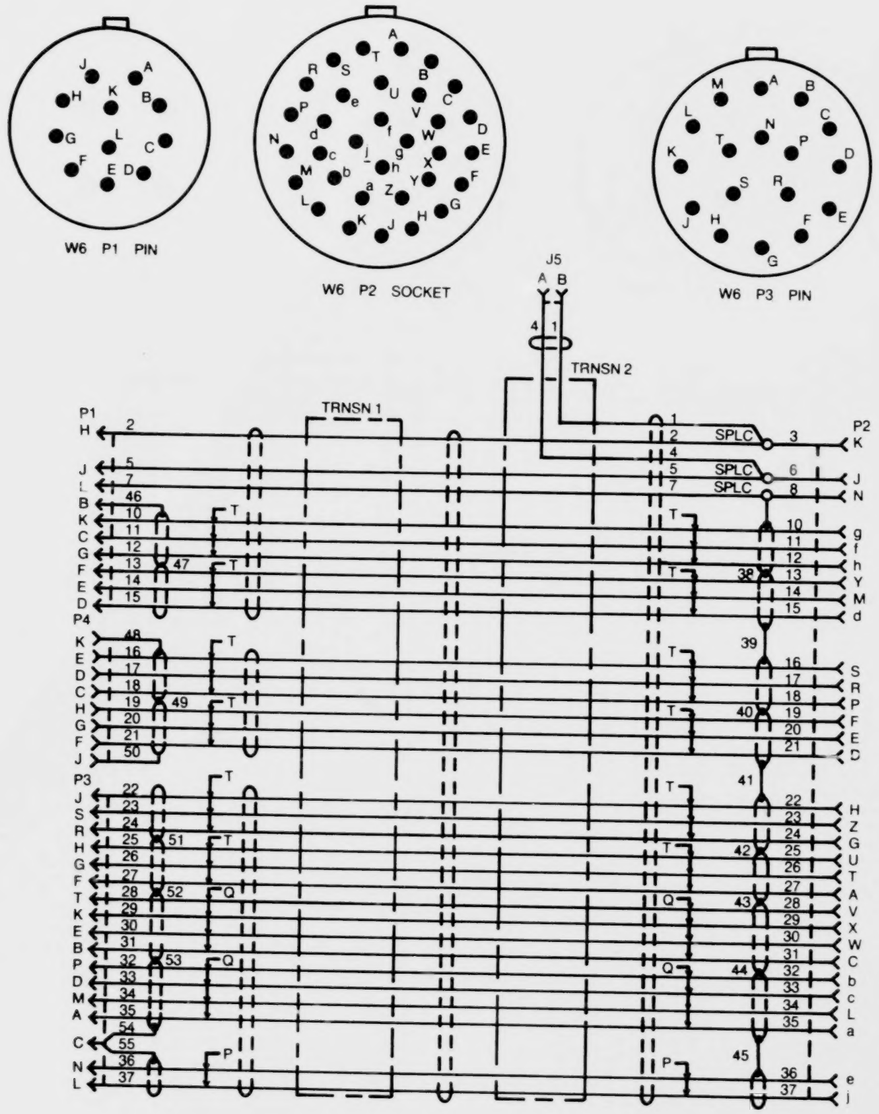

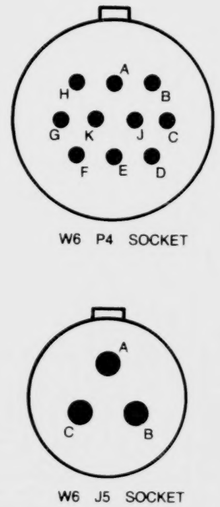

Figure S-45. Cable assembly W6 wiring diagram. ■

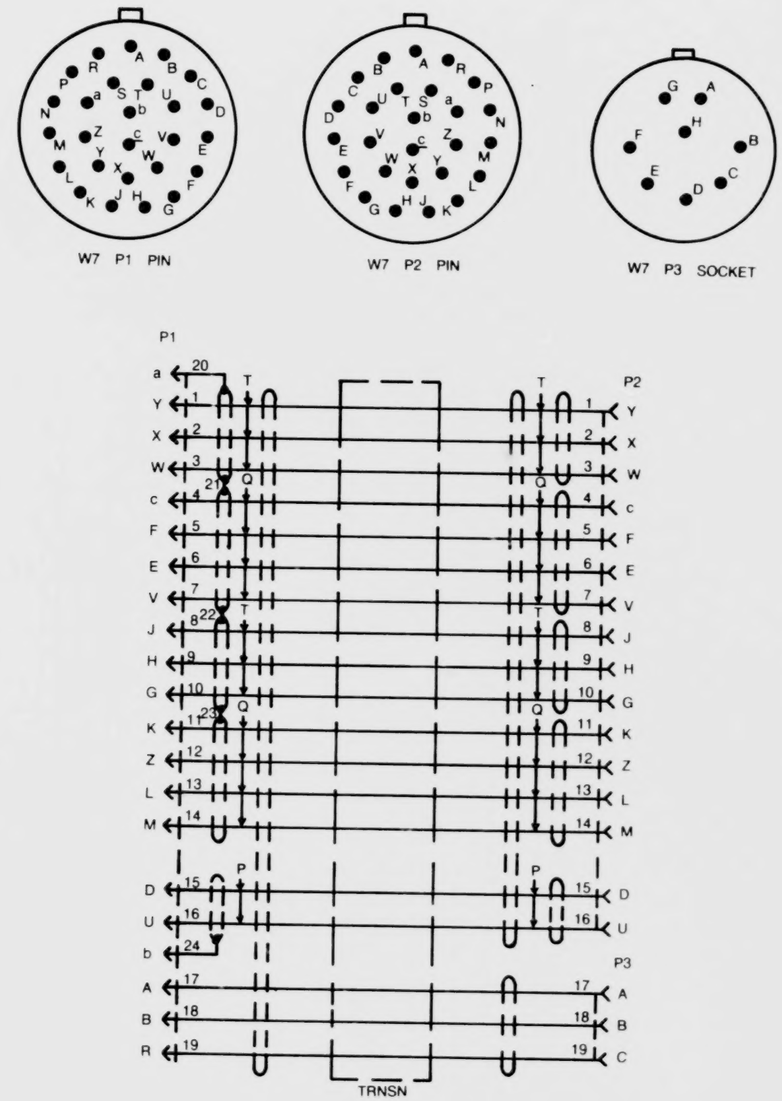

Figure S-46. Cable assembly W7 wiring diagram. ■

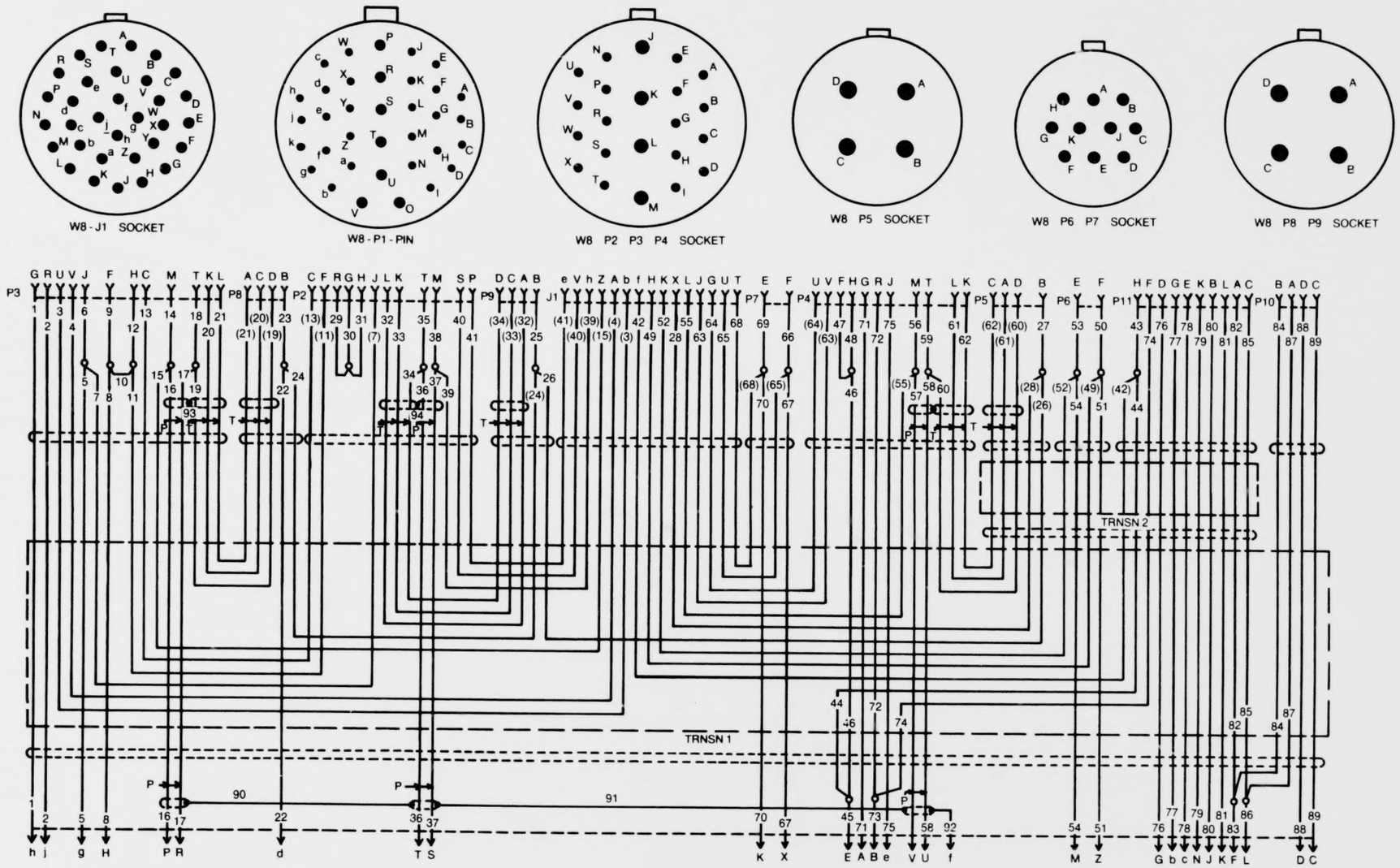

Figure S-47. Cable assembly W8 wiring diagram. ■

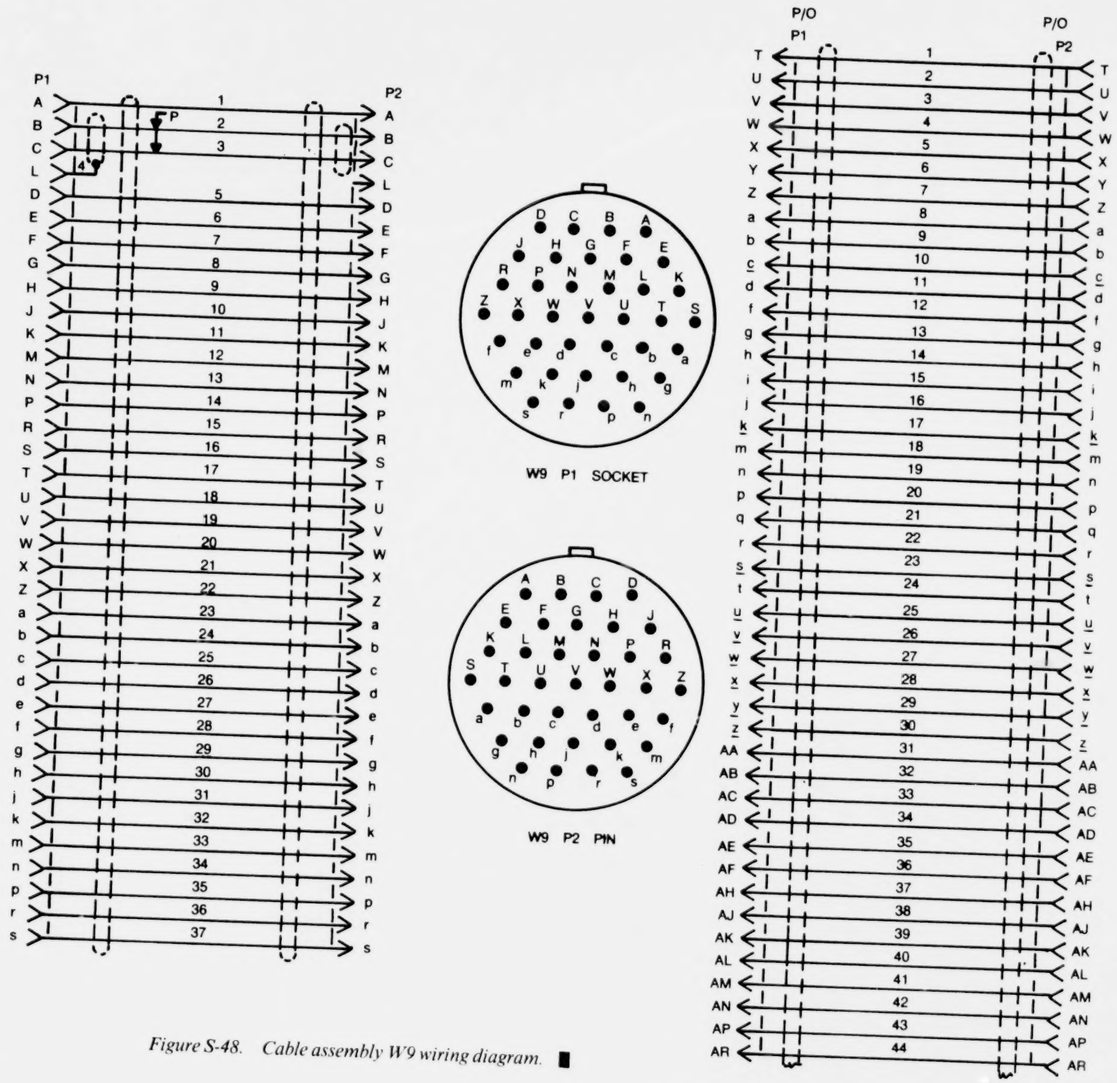

Figure S-48. Cable assembly W9 wiring diagram. ■

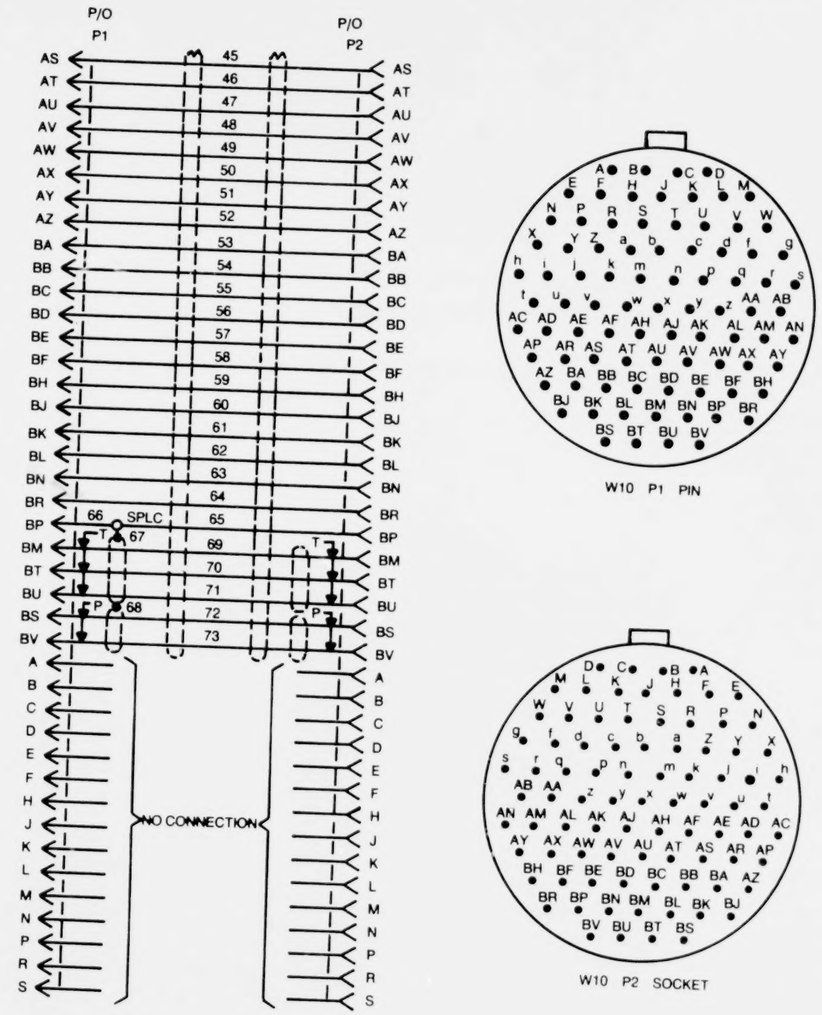

Figure S-49. Cable assembly W10 wiring diagram. ■

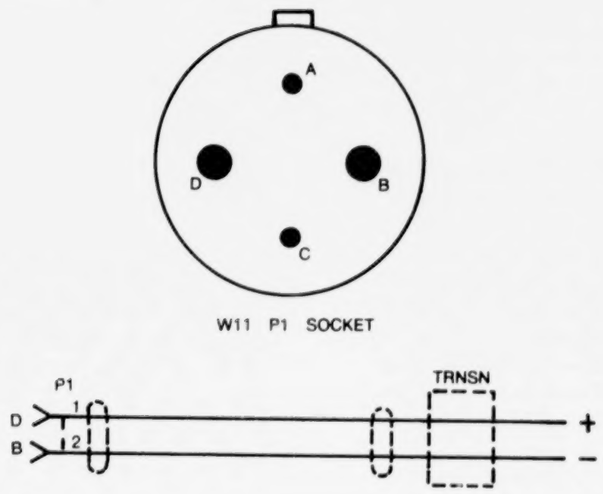

Figure S-50. Cable assembly W11 wiring diagram. ■

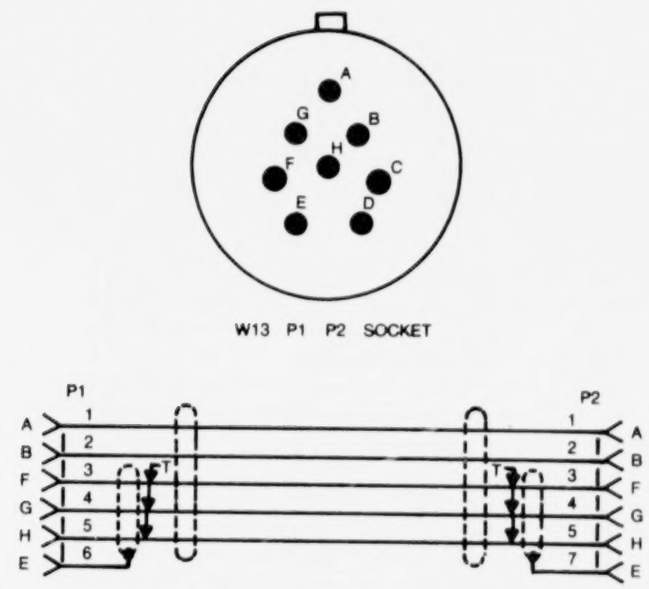

Figure S-52. Cable assembly W13 wiring diagram. ■

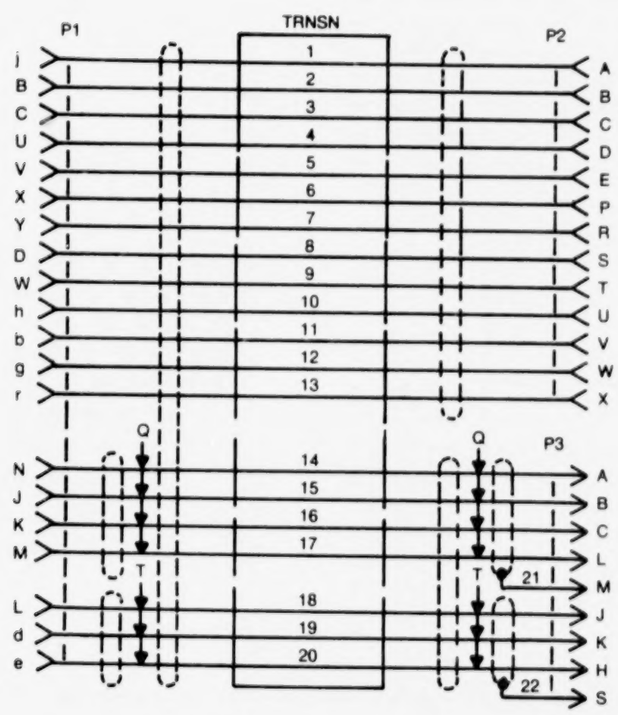

Figure S-51. Cable assembly W12 wiring diagram. ■

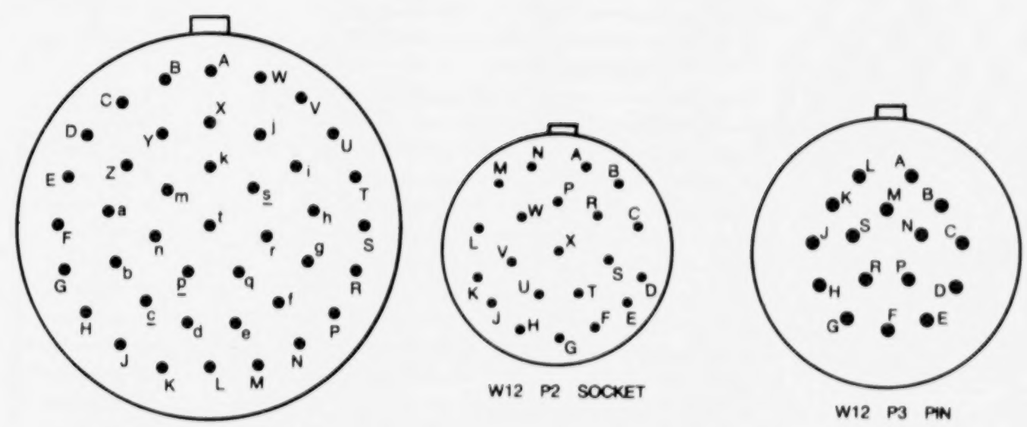

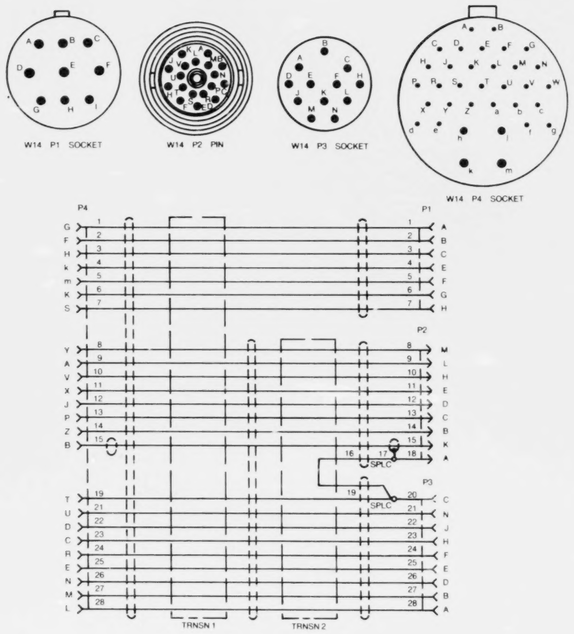

Figure S-53. Cable assembly W14 wiring diagram. ■

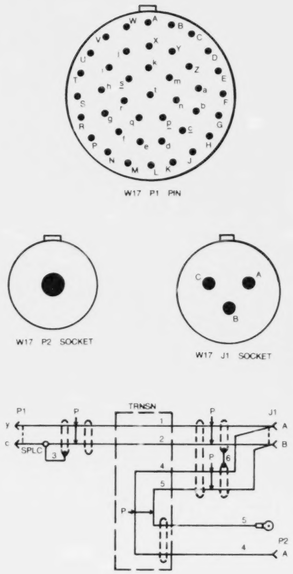

Figure S-54. Cable assembly W17 wiring diagram. ■

CABLE SUB NO	WIRE NO	FROM	EQUIP WITH PART NO	FIG	NOTE	PART NO	AWG	COLOR (NOTE 7)	TO	EQUIP WITH PART NO	FIG	NOTE
13	1	P1-A					20	BLU	P2-A			
	2	P1-B					20	WHT	P2-B			
	SHLD	P1-Z	11829974-1	A			—		P2-Z	11829974-1	A	
1		P1-G					20	WHT	P2-G			
2		P1-H					20	WHT	P2-H			
14	1	P1-K					20	BLU	P2-K			
	2	P1-L					20	WHT	P2-L			
	SHLD	P1-e	11829974-1	A			—		P2-e	11829974-1	A	
15	1	P1-M					20	BLU	P2-M			
	2	P1-N					20	WHT	P2-N			
	SHLD	P1-f	11829974-1	A			—		P2-f	11829974-1	A	
3		P1-U					20	WHT	P2-U			
9		P1-V					20	WHT	P2-V			
10		P1-W					20	WHT	P2-W			
16	1	P1-X					20	BLU	P2-X			
	2	P1-Y					20	WHT	P2-Y			
	SHLD	P1-k	11829974-1	A			—		P2-k	11829974-1	A	
18	1	P1-a				11829989 (W1)	16	BLU	P2-a			
	2	P1-m					16	WHT	P2-m			
	SHLD	P1-b	11829974-1	A			—		P2-b	11829974-1	A	
4		P1-c					16	WHT	P2-c			
11		P1-d					20	WHT	P2-d			
19	1	P1-g					16	BLU	P2-g			
	2	P1-q					16	WHT	P2-q			
	SHLD	P1-n	11829974-1	A			—		P2-n	11829974-1	A	
17	1	P1-r					20	BLU	P2-r			
	2	P1-s					20	WHT	P2-s			
	SHLD	P1-t	11829974-1	A			—		P2-t	11829974-1	A	
—		P1-n					16	WHT	P2-n			
6		P1-p					16	WHT	P2-p			
7		P1-r					16	WHT	P2-r			
5		P1-t					16	WHT	P2-t			
12		P1-J					20	WHT	P2-J			
—	SHLD	P1-C	M81044/12-20-9	B			20	WHT	P2-C	M81044/12-20-9	B	

Figure S-55. Cable assembly W101 wiring diagram. ■

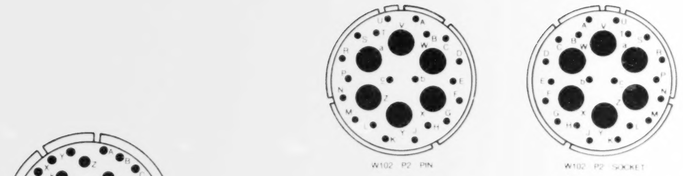

CABLE SUB NO	WIRE NO	FROM	EQUIP WITH PART NO	FIG	NOTE	PART NO	AWG	COLOR (NOTE 7)	TO	EQUIP WITH PART NO	FIG	NOTE
10	1	P1-B					20	BLU	P2-B			
	2	P1-C					20	WHT	P2-C			
	SHLD	P1-D	11829975-1	A					P2-D	11829974-1	A	
	SHLD	P1-E	11829975-1	A					P2-E	11829975-1	A	
1	1	P1-W					12	WHT	P2-W			
	2	P1-V					12	BLU	P2-V			
4		P1-F					20	WHT	P2-F			
11	1	P1-G					20	BLU	P2-G			
	2	P1-H					20	WHT	P2-H			
	SHLD	P1-J	11829974-1	A					P2-J	11829974-1	A	
3	1	P1-K				11829989 (W1)	20	BLU	P2-K			
	2	P1-M					20	WHT	P2-M			
	3	P1-N					20	GRN	P2-N			
	SHLD	P1-L	11829974-1	A					P2-L	11829974-1	A	
7	1	P1-R					20	WHT	P2-R			
	SHLD	P1-P	11829974-1	A					P2-P	11829974-1	A	
	SHLD		11829975-1	A						11829975-1	A	
9	2	P1-Y					12	WHT	P2-Y			
	1	P1-X					12	BLU	P2-X			
8		P1-c					20	WHT	P2-c			
12	1	P1-U					20	BLU	P2-U			
	2	P1-U					20	WHT	P2-U			
	SHLD	P1-T	11829974-1	A					P2-T	11829974-1	A	
6		P1-Z					20	WHT	P2-Z			
5		P1-a					20	WHT	P2-a			
8	1	P1-b					20	WHT	P2-b			
	SHLD	P1-A	M81044/12-20-9	B			20	WHT	P2-A	M81044/12-20-9	B	

Figure S-56. Cable assembly W102 wiring diagram. ■

CABLE	WIRE NO	FROM	EQUIP WITH PART NO	FIG	NOTE	CABLE PART NO	AWG	COLOR (NOTE 1)	TO	EQUIP WITH PART NO	FIG	NOTE
W3	1	P1-HH	SEE FIG	—	—	M81044/12-20-9	20	WHITE	P2-J	SEE FIG	—	—
W4	1	P1-h		—	—	M81044/12-20-9	20	WHITE	P2-H		—	—
W6	1	P1-e		—	—	M27500-20ML2T08	20	BLUE	P2-C		—	—
	2	P1-f		—	—		20	WHITE	P2-D		—	—
	SHLD	P1-g		L	—		—	—	P2-G		L	—
W8	1	P1-j		—	—	M27500-20ML1T08	20	WHITE	P2-A		—	—
	SHLD	P1-z		L	—		—	—	—		N	—
W19	1	P1-x		—	—	M27500-20ML3T08	20	BLUE	P2-E		—	—
	2	P1-y		—	—		20	WHITE	P2-F		—	—
	3	P1-FF		—	—		20	ORANGE	P2-M		—	—
	SHLD	P1-GG		L	—		—	—	P2-L		L	—
SHLD	—	—		—	—	M81044/12-20-9	20	WHITE	P2-B		J	—
W1	1	P1-DD		—	—	M81044/12-20-9	20	WHITE	P3-U		—	—
W2	1	P1-R		—	—	M81044/12-20-9	20	WHITE	P3-R		—	—
W5	1	P1-H		—	—	M27500-20ML3T08	20	BLUE	P3-L		—	—
	2	P1-J		—	—		20	WHITE	P3-P		—	—
	3	P1-K		—	—		20	ORANGE	P3-N		—	—
	SHLD	P1-M		L	—		—	—	P3-M		L	—
W7	1	P1-AA		—	—	M27500-20ML1T08	20	WHITE	P3-T		—	—
	SHLD	P1-BB		L	—		—	—	—		N	—
W9	1	P1-B		—	—	M27500-20ML2T08	20	BLUE	P3-e		—	—
	2	P1-C		—	—		20	WHITE	P3-g		—	—
	SHLD	P1-X		L	—		—	—	—		M	—
W10	1	P1-N		—	—		20	BLUE	P3-J		—	—
	2	P1-P		—	—		20	WHITE	P3-K		—	—
	SHLD	P1-r		L	—		—	—	—		M	—
W11	1	P1-U		—	—		20	BLUE	P3-G		—	—
	2	P1-n		—	—		20	WHITE	P3-H		—	—
	SHLD	P1-p		L	—		—	—	—		M	—
W12	1	P1-k		—	—		20	BLUE	P3-E		—	—
	2	P1-m		—	—		20	WHITE	P3-F		—	—
	SHLD	P1-S		L	—		—	—	P3-X		L	—
W13	1	P1-v		—	—		20	BLUE	P3-Y		—	—
	2	P1-w		—	—		20	WHITE	P3-Z		—	—
	SHLD	P1-EE		L	—		—	—	—		M	—
W14	1	P1-c		—	—		20	BLUE	P3-a		—	—
	2	P1-u		—	—		20	WHITE	P3-b		—	—
	SHLD	P1-t		L	—		—	—	—		M	—
W15	1	P1-A		—	—	M27500-20ML2T08	20	BLUE	P3-d		—	—
	2	P1-V		—	—		20	WHITE	P3-f		—	—
	SHLD	P1-W		L	—		—	—	—		M	—
W16	1	P1-D		—	—	M27500-20ML3T08	20	BLUE	P3-C		—	—
	2	P1-E		—	—		20	WHITE	P3-D		—	—
	3	P1-Y		—	—		20	ORANGE	P3-W		—	—
	SHLD	P1-Z		L	—		—	—	—		M	—
W17	1	P1-F		—	—	M27500-20ML3T08	20	BLUE	P3-V		—	—
	2	P1-G		—	—		20	WHITE	P3-B		—	—
	3	P1-a		—	—		20	ORANGE	P3-A		—	—
	SHLD	P1-b		L	—		—	—	—		M	—
W18	1	P1-q		—	—	M27500-20ML3T08	20	BLUE	P3-h		—	—
	2	P1-r		—	—		20	WHITE	P3-j		—	—
	3	P1-CC		—	—		20	ORANGE	P3-k		—	—
	SHLD	P1-s		L	—		—	—	—		M	—
SHLD		P1-T	SEE FIG	J	—	M81044/12-20-9	20	WHITE	P3-S	SEE FIG	J	—

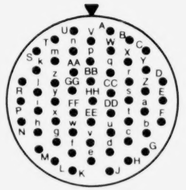

W103 P1 PIN

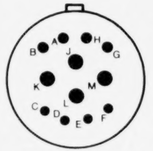

W103 P2 SOCKET

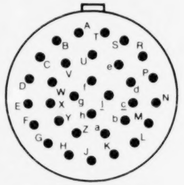

W103 P3 SOCKET

Figure S-57. Cable assembly W103 wiring diagram. ■

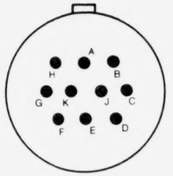

W104 P1 PIN

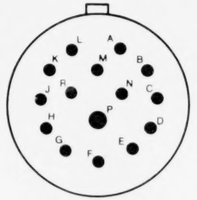

W104 P2 SOCKET

CABLE SUB NO	WIRE NO	FROM	EQUIP WITH PART NO	FIG	NOTE	PART NO	AWG	COLOR (NOTE 7)	TO	EQUIP WITH PART NO	FIG	NOTE
1	1	P1-A	11829974-1	A		11829991 (W1)	20	BLU	P2-A	11829984-1	A	
	2	P1-B					20	WHT	P2-B			
	SHLD	P1-J							P2-M			
3		P1-C					20	WHT	P2-G			
2	1	P1-F					20	BLU	P2-F			
	2	P1-G					20	WHT	P2-P			
	3	P1-H					20	ORN	P2-E			
	SHLD	P1-K							P2-N			
—	SHLD	P1-D	M81044/12-20-9	B			20	WHT	P2-C	M81044/12-20-9	B	

Figure S-58. Cable assembly W104 wiring diagram. ■

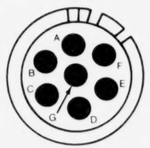

W105 P2 PIN

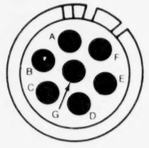

W105 P4 PIN

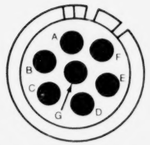

W105 P1 PIN

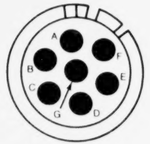

W105 P3 PIN

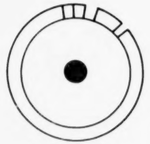

W105 P5 PIN

CABLE	WIRE NO	FROM	EQUIP WITH PART NO	FIG	NOTE	CABLE PART NO	AWG	COLOR	TO	EQUIP WITH PART NO	FIG	NOTE
W1	1	P1-E	SEE FIG	L	—	11829996 (W1)	24	—	P2-E	SEE FIG	M	—
	2	P1-B		M	—		24	—	P2-B		M	—
	3	P1-C		M	—		24	—	P2-C		M	—
	4	P1-D		M	—		24	—	P2-D		M	—
	SHLD	P1-E		L	—		WIRE LIST	—	P1-E		K	—
W2	1	P1-F		N	—	11829997 (W2)	22	—	P2-F		P	—
	2	P1-G		N	—		22	—	P2-G		P	—
	SHLD	—		—	—		WIRE LIST	—	P2-A		P	—
W3	1	P1-A		W	—	11829993 (W3)	19	—	P3-E		T	—
	SHLD	—					WIRE LIST	—	P3-D		T	—
W4	1	P4-B		U	—	M17/88RG058 (W4)	21	—	P3-B		U	—
W5	1	P4-F		M	—	10549139(W5)	24	—	P3-F		M	—
W6	1	P4-G		T	—	10549114(W6)	22	—	P3-G		W	—
	SHLD	P4-E		T	—		WIRE LIST	—				
SHLD	—	P4-A	SEE FIG	V	—		WIRE LIST	—				
—	—	P4-C	—	—	9		—	—				
—	—	P4-D	—	—	9		—	—				
W7	1	P5	—	—	—	11829993(W7)	19	—	P3-A		W	—
SHLD	—	—	—	—	—		WIRE LIST	—	P3-C	SEE FIG	V	—

Figure S-59. Cable assembly W105 wiring diagram. ■

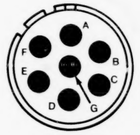

W106 P1 PIN

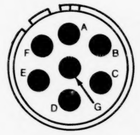

W106 P2 PIN

CABLE SUB NO	WIRE NO	FROM	EQUIP WITH PART NO	FIG	NOTE	PART NO	AWG	COLOR	TO	EQUIP WITH PART NO	FIG	NOTE
1	1	P1-D	11830001-2	E			22	WHT	P2-D	11830001-2	E	
	SHLD	P1-C	11830001-1	E	7	11829992	WIRE SHIELD	—	P2-C	11830001-1	E	7
2	1	P1-E	11830001-2	E		(W1)	22	WHT	P2-E	11830001-2	E	
	SHLD	P1-F	11830001-1	E	7		WIRE SHIELD	—	P2-F	11830001-1	E	7
—	SHLD	P1-G	11830001-1	B			WIRE SHIELD	—	P2-G	11830001-1	B	
—	—	P1-A	11830001-2		8	—	—	—	P2-A	11830001-2		8
—	—	P1-B	11830001-2		8	—	—	—	P2-B	11830001-2		8

Figure S-60. Cable assembly W106 wiring diagram. ■

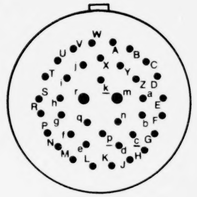

W107 P1 PIN

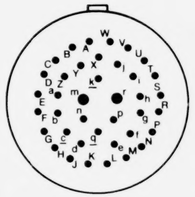

W107 P2 SOCKET

CABLE SUB NO	WIRE NO	FROM	EQUIP WITH PART NO	FIG	NOTE	PART NO	AWG	COLOR (NOTE 7)	TO	EQUIP WITH PART NO	FIG	NOTE
7	1	P1-G					20	BLU	P2-G			
	2	P1-H					20	WHT	P2-H			
	3	P1-c					20	ORN	P2-c			
	SHLD	P1-b	11829974-1	A					P2-b	11829974-1	A	
9	1	P1-S					20	BLU	P2-S			
	2	P1-g					20	WHT	P2-g			
	3	P1-h					20	ORN	P2-h			
	4	P1-f					20	GRN	P2-f			
	SHLD	P1-r	11829974-1	A					P2-r	11829974-1	A	
3	1	P1-W					20	BLU	P2-W			
	2	P1-X				11829994	20	WHT	P2-X			
	SHLD	P1-j	11829974-1	A		(W1)			P2-j	11829974-1	A	
2		P1-Y					20	WHT	P2-Y			
4		P1-a					20	WHT	P2-a			
6		P1-n					20	WHT	P2-n			
5	1	P1-d					20	BLU	P2-d			
	2	P1-e					20	WHT	P2-e			
	SHLD	P1-p	11829974-1	A					P2-p	11829974-1	A	
1	1	P1-m					16	BLU	P2-m			
	2	P1-r					16	WHT	P2-r			
	SHLD	P1-k	11829974-1	A					P2-k	11829974-1	A	
8		P1-q					20	WHT	P2-q			
—	SHLD	P1-A	M81044/12-20-9	B			20	WHT	P2-A	M81044/12-20-9	B	

Figure S-61. Cable assembly W107 wiring diagram. ■

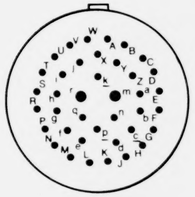

W108 P1 PIN

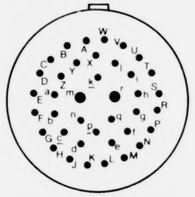

W108 P2 SOCKET

CABLE SUB NO	WIRE NO	FROM	EQUIP WITH PART NO	FIG	NOTE	PART NO	AWG	COLOR (NOTE 7)	TO	EQUIP WITH PART NO	FIG	NOTE
1	1	P1-D					20	BLU	P2-D			
	2	P1-E					20	WHT	P2-E			
	3	P1-F					20	ORN	P2-F			
	SHLD	P1-Z	11829974-1	A					P2-Z	11829974-1	A	
9	1	P1-G					20	BLU	P2-G			
	2	P1-H					20	WHT	P2-H			
	3	P1-c					20	ORN	P2-c			
	SHLD	P1-b	11829974-1	A					P2-b	11829974-1	A	
11	1	P1-M					20	BLU	P2-M			
	2	P1-N					20	WHT	P2-N			
	3	P1-P					20	ORN	P2-P			
	SHLD	P1-R	11829974-1	A					P2-R	11829974-1	A	
2	1	P1-S					20	BLU	P2-S			
	2	P1-f					20	WHT	P2-f			
	3	P1-g				11829995	20	ORN	P2-g			
	4	P1-h				(W1)	20	GRN	P2-h			
	SHLD	P1-r	11829974-1	A					P2-r	11829974-1	A	
3	1	P1-W					20	BLU	P2-W			
	2	P1-X					20	WHT	P2-X			
	SHLD	P1-j	11829974-1	A					P2-j	11829974-1	A	
4		P1-Y					20	WHT	P2-Y			
6		P1-a					20	WHT	P2-a			
5	1	P1-d					20	BLU	P2-d			
	2	P1-e					20	WHT	P2-e			
	SHLD	P1-p	11829974-1	A					P2-p	11829974-1	A	
8		P1-q					20	WHT	P2-q			
10		P1-n					20	WHT	P2-n			
7	1	P1-r					16	BLU	P2-r			
	2	P1-m					16	WHT	P2-m			
	SHLD	P1-k	11829974-1	A					P2-k	11829974-1	A	
—		P1-A	M81044/12-20-9				20	WHT	P2-A	M81044/12-20-9	B	

Figure S-62. Cable assembly W108 wiring diagram. ■

M163A1 CABLES

CABLE	ROUTING SHOWN ON			
	SH. 2	SH. 3	SH. 4	SH. 5
W1			X	
W2			X	
W3				X
W4			X	
W5		X		
W6		X		X
W7		X		
W8				X
W9				X
W10				X
W11	X			
W12		X		
W13			X	
W14	X			
W15	X			
W16	X			
W17				X
A24JP1				X
W101		X		
W102		X		
W103		X		
W104		X		
W105		X		
W106		X		
W107		X		
W108		X		

AR 905119

Figure S-63. Cable routing (sheet 1 of 5).

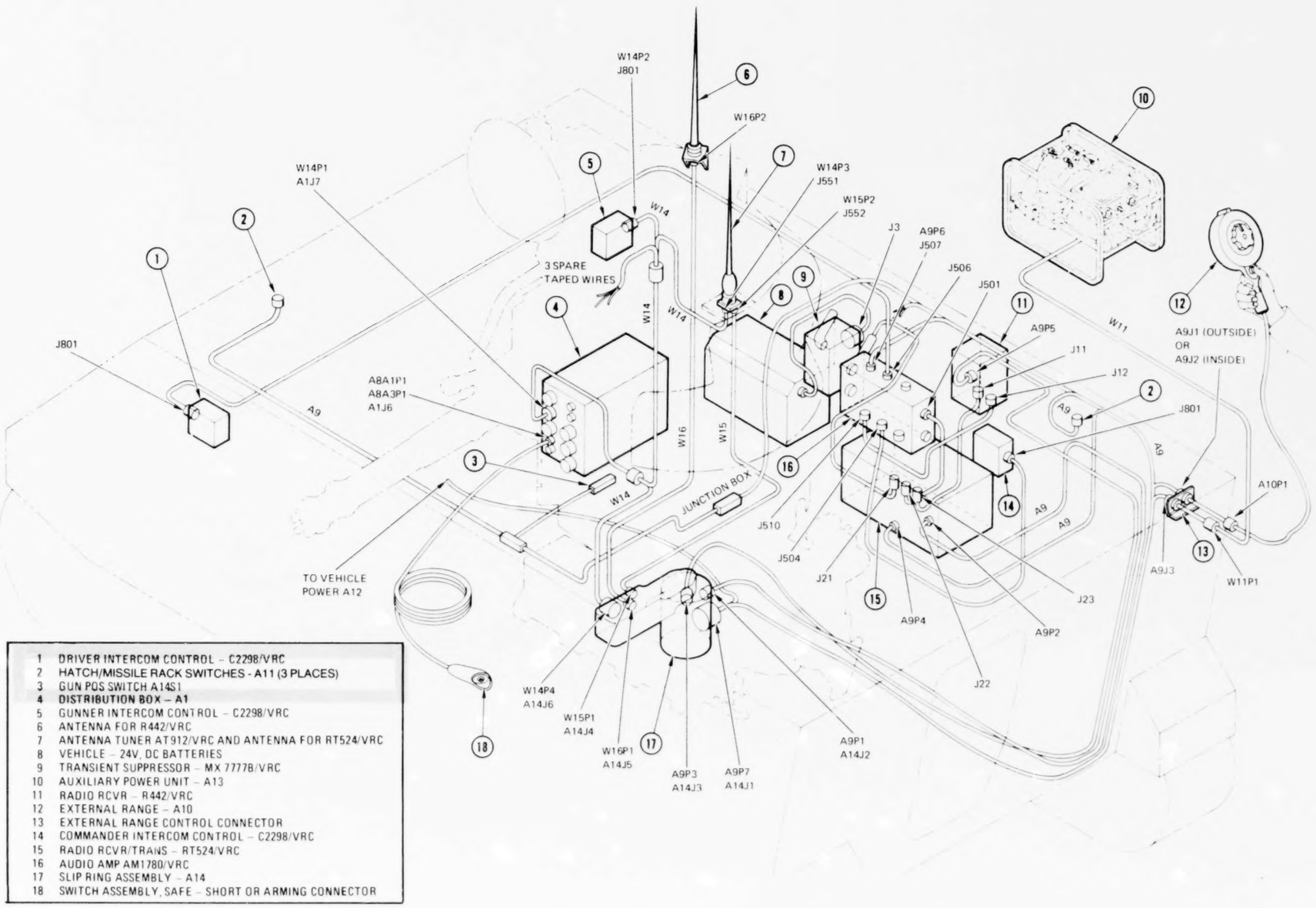

1	DRIVER INTERCOM CONTROL – C2298/VRC
2	HATCH/MISSILE RACK SWITCHES - A11 (3 PLACES)
3	GUN POS SWITCH A14S1
4	DISTRIBUTION BOX – A1
5	GUNNER INTERCOM CONTROL – C2298/VRC
6	ANTENNA FOR R442/VRC
7	ANTENNA TUNER AT912/VRC AND ANTENNA FOR RT524/VRC
8	VEHICLE – 24V, DC BATTERIES
9	TRANSIENT SUPPRESSOR – MX 7777B/VRC
10	AUXILIARY POWER UNIT – A13
11	RADIO RCVR – R442/VRC
12	EXTERNAL RANGE – A10
13	EXTERNAL RANGE CONTROL CONNECTOR
14	COMMANDER INTERCOM CONTROL – C2298/VRC
15	RADIO RCVR/TRANS – RT524/VRC
16	AUDIO AMP AM1780/VRC
17	SLIP RING ASSEMBLY – A14
18	SWITCH ASSEMBLY, SAFE – SHORT OR ARMING CONNECTOR

Figure S-63. Cable routing (sheet 2 of 5). ■

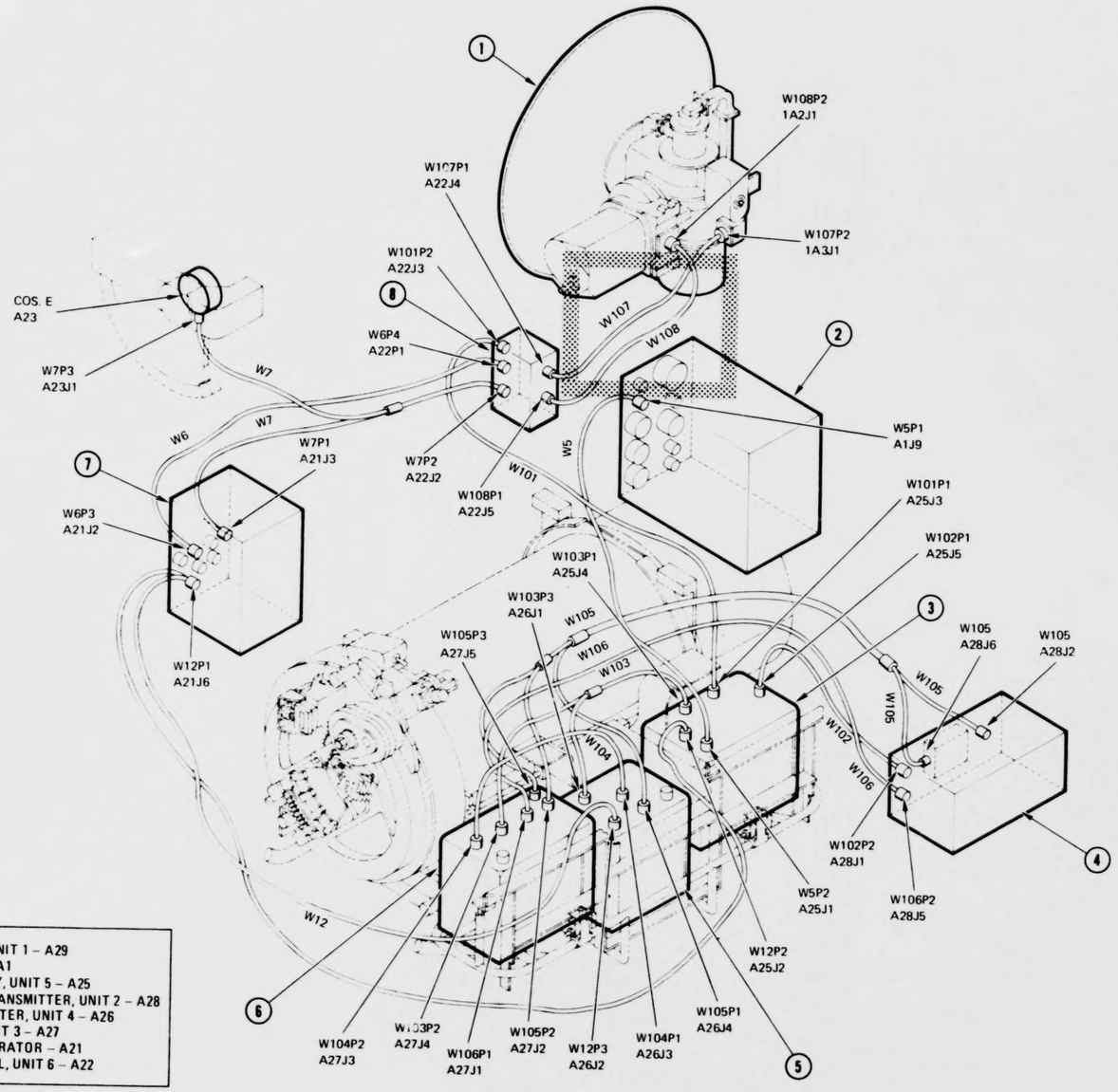

1	RADAR ANTENNA – UNIT 1 – A29
2	DISTRIBUTION BOX – A1
3	RADAR POWER SUPPLY, UNIT 5 – A25
4	RADAR RECEIVIER TRANSMITTER, UNIT 2 – A28
5	RADAR RANGE COMPUTER, UNIT 4 – A26
6	RADAR RECEIVER, UNIT 3 – A27
7	SIGHT CURRENT GENERATOR – A21
8	RADAR STOW CONTROL, UNIT 6 – A22

AR 908112

Figure S-63. Cable routing (sheet 3 of 5).

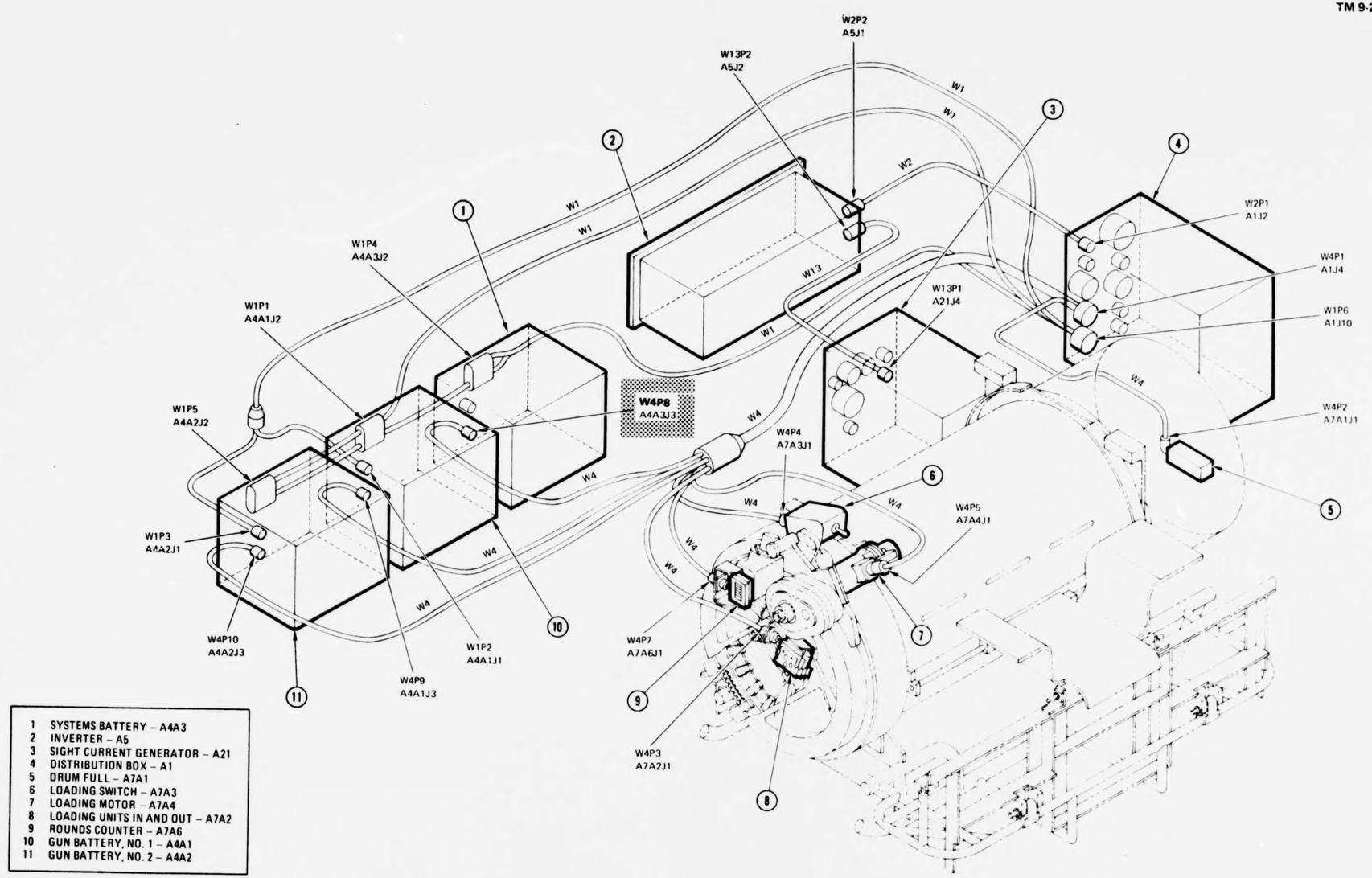

1	SYSTEMS BATTERY – A4A3
2	INVERTER – A5
3	SIGHT CURRENT GENERATOR – A21
4	DISTRIBUTION BOX – A1
5	DRUM FULL – A7A1
6	LOADING SWITCH – A7A3
7	LOADING MOTOR – A7A4
8	LOADING UNITS IN AND OUT – A7A2
9	ROUNDS COUNTER – A7A6
10	GUN BATTERY, NO. 1 – A4A1
11	GUN BATTERY, NO. 2 – A4A2

AMC84-1219

Figure S-63. Cable routing (sheet 4 of 5).

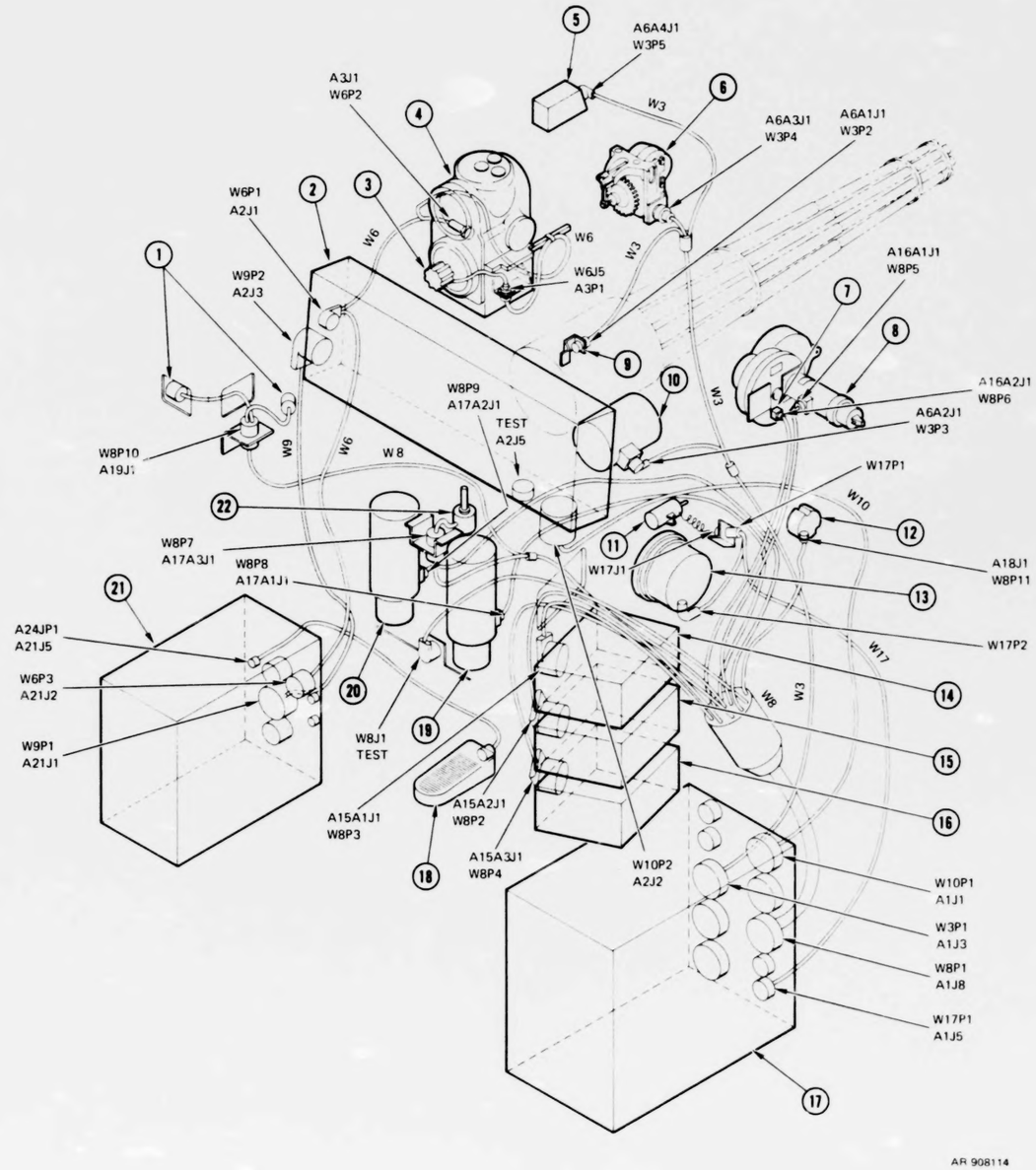

1	AZ LIMIT SWITCHES – A19
2	CONTROL PANEL – A2
3	CAGE SWITCH
4	SIGHT – A3
5	CLEAR AND BRAKE RELEASE – A6A4
6	DECLUTCHING FEEDER – A6A3
7	ELEVATION TACH – A16A2
8	ELEVATION MOTOR – A16A1
9	FIRING VOLTS – A1
10	GUN MOTOR AND BRAKE – A6A2
11	LIGHT ASSEMBLY
12	ELEVATION LIMIT SWITCH – A18
13	AZIMUTH INDICATOR
14	AZ NO. 1 AMP. – A15A1
15	AZ NO. 2 AMP. – A15A2
16	ELEVATION AMP. – A15A3
17	DISTRIBUTION BOX – A1
18	FOOT SWITCH – A24
19	AZ MOTOR NO. 1 – A17A1
20	AZ MOTOR NO. 2 – A17A2
21	SIGHT CURRENT GENERATOR – A21
22	AZ TACH. – A17A3

Figure S-63. Cable routing (sheet 5 of 5).

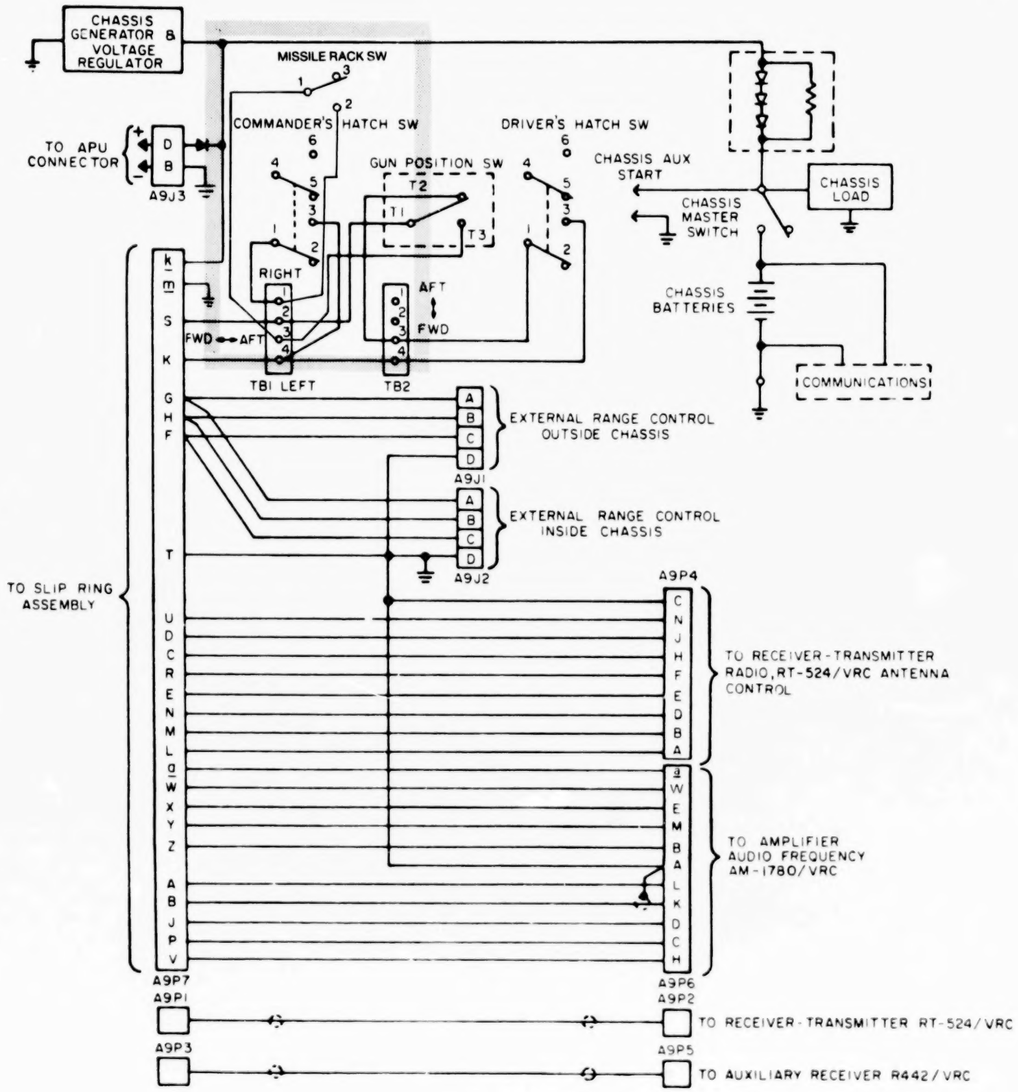

Figure S-64. Interface wiring diagram, M157A1 mount and M741 chassis. ■

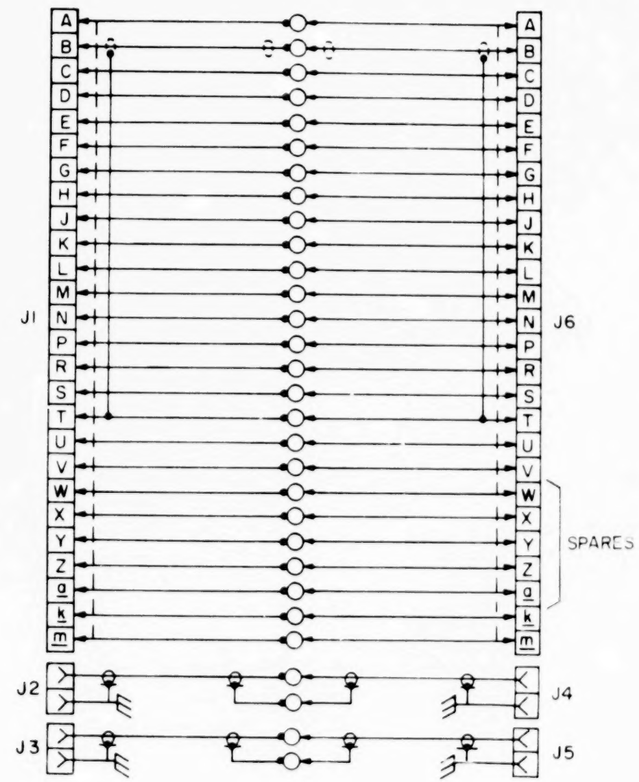

Figure S-65. Slip ring assembly wiring diagram.

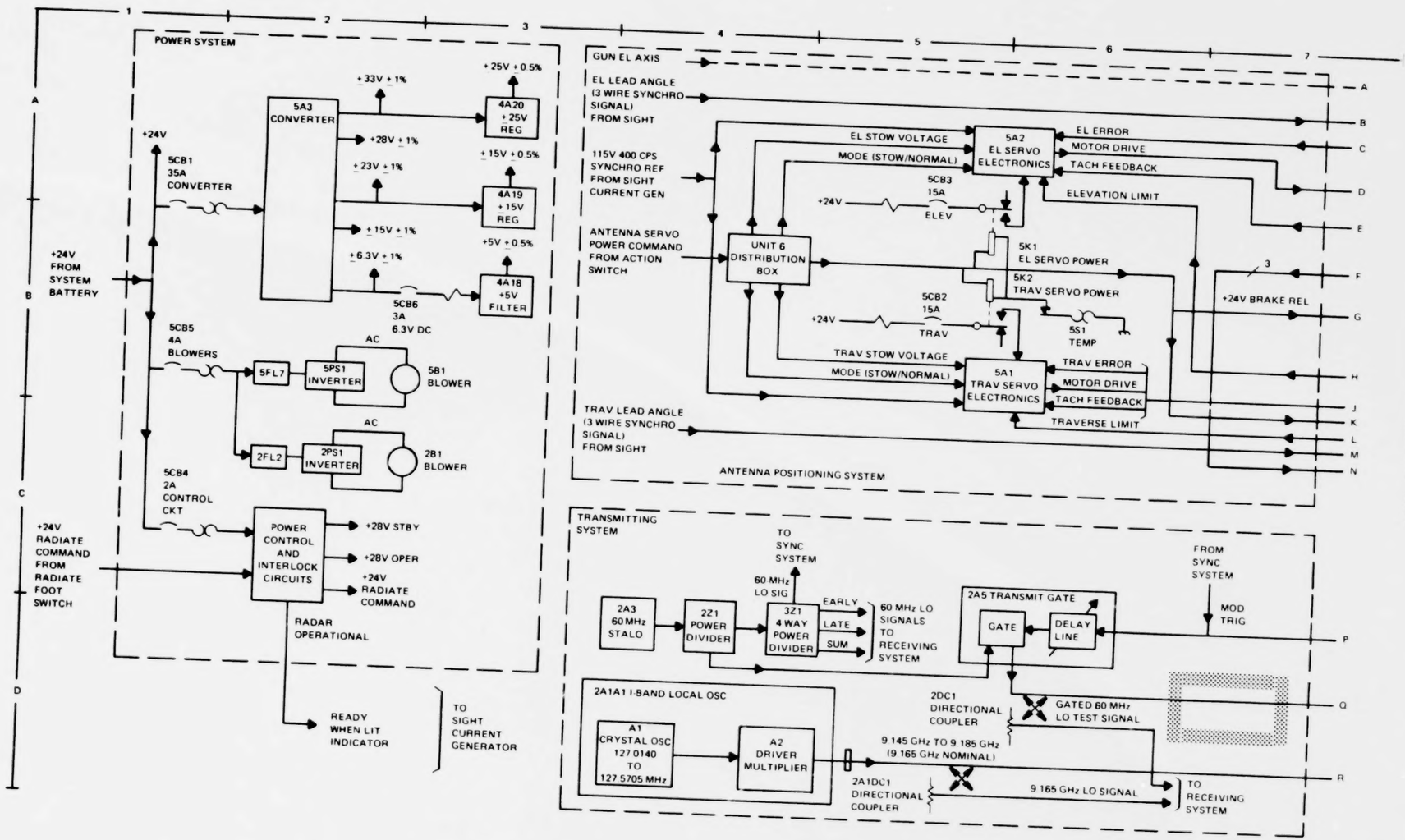

REFERENCE DESIGNATION	ZONE
2B1	C 2
2DC1	D 6
2A1DC1	D 5
5B1	B 2
5CB1	A 1
5CB2	B 5
5CB3	A 5
5CB4	C 1
5CB5	B 1
5CB6	B 2
5K1	A 5
5K2	B 5
5S1	B 6

Figure S-66. Radar set AN/VPS-2 simplified functional schematic (sheet 1 of 4).

REFERENCE DESIGNATION	ZONE
1A2S1	B-9
1A3S1	B-10
2DS1	C-11
2DS2	C-11
2S1	D-11
2A1AT1	D-10
2A1AT2	D-13
2A1AT3	D-8
2A1AT5	D-9
2A1M1	D-11

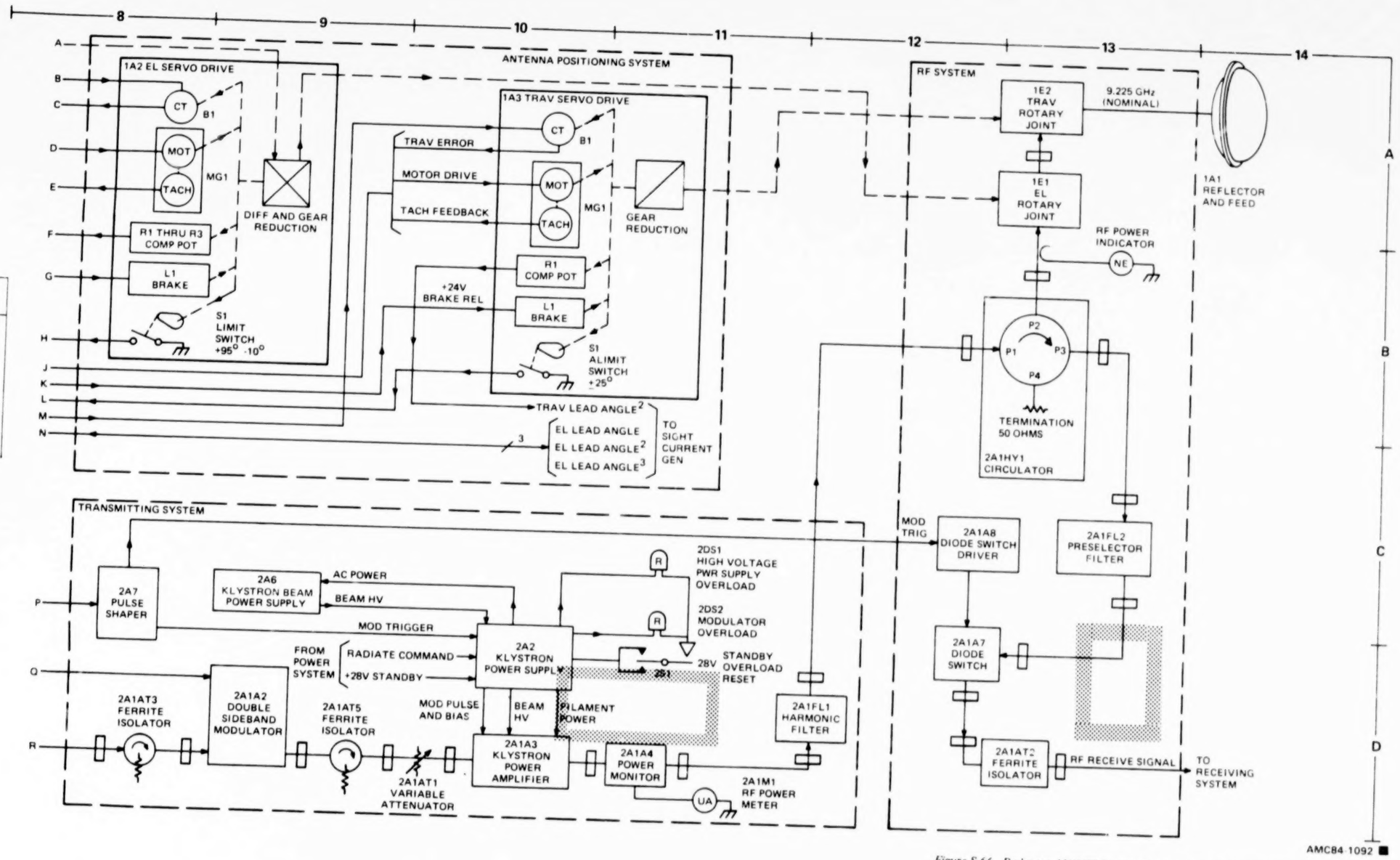

Figure S-66. Radar set AN/VPS-2 simplified functional schematic (sheet 2 of 4)

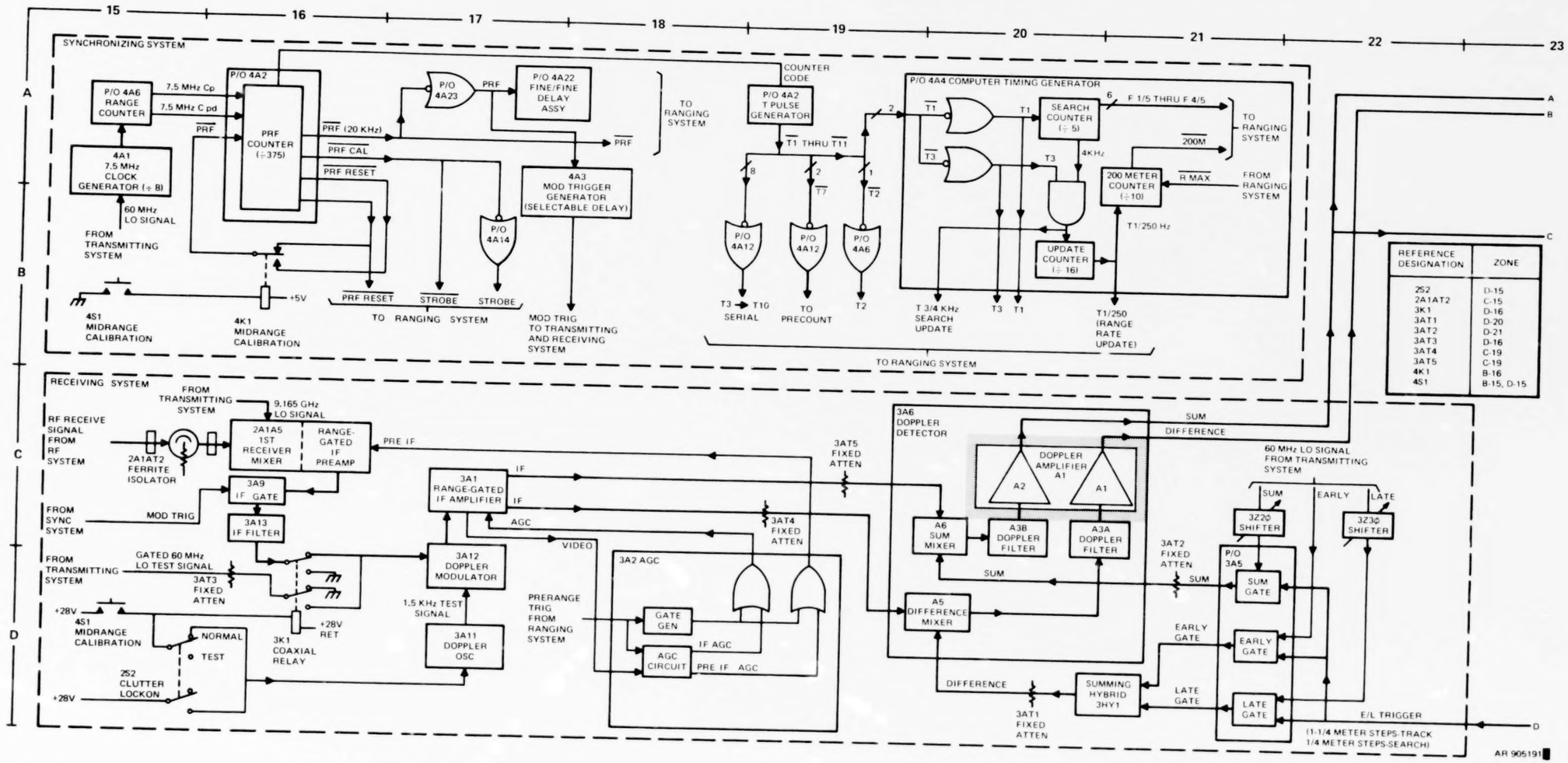

Figure S-66. Radar set AN/VPS-2 simplified functional schematic (sheet 3 of 4).

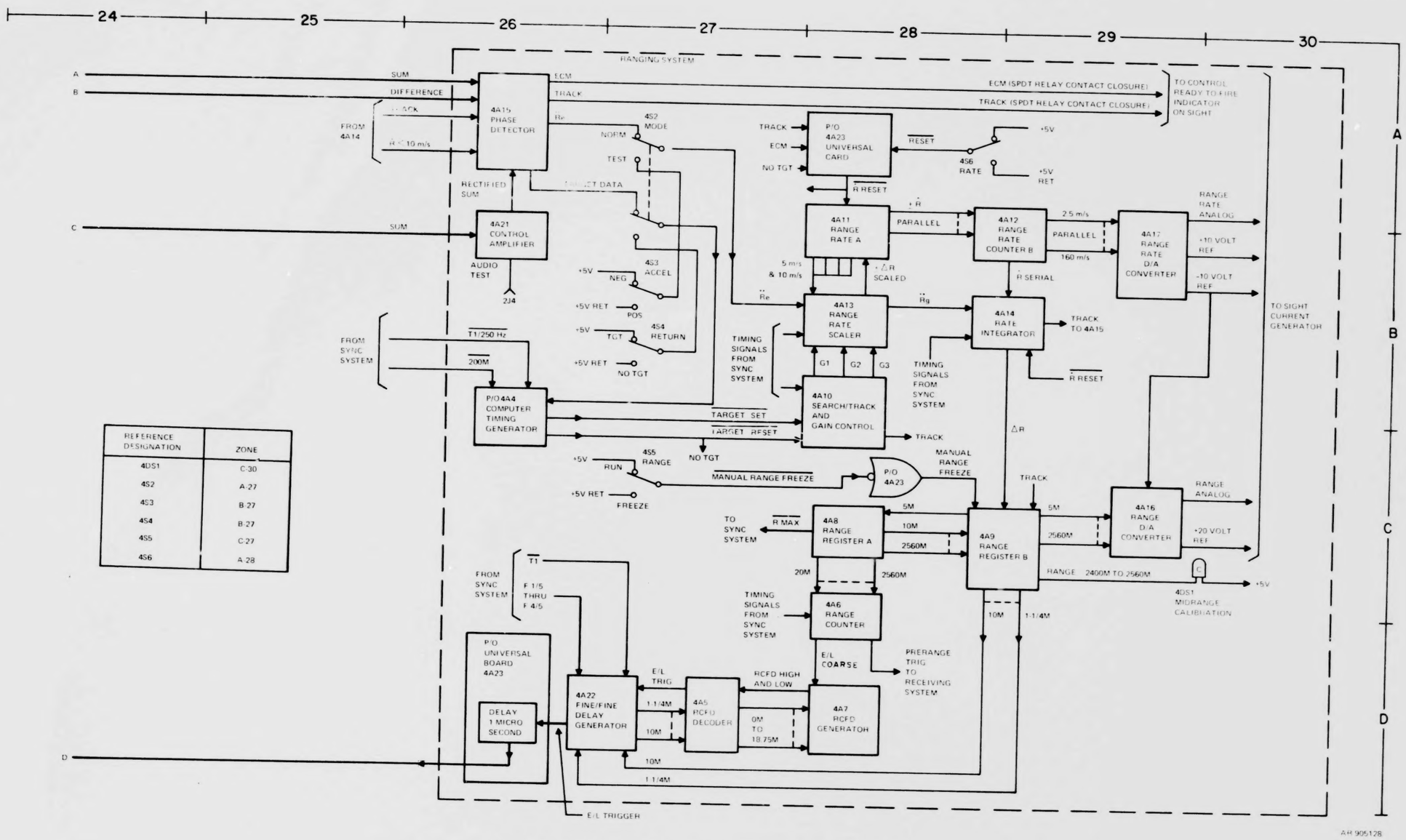

REFERENCE DESIGNATION	ZONE
4DS1	C-30
4S2	A-27
4S3	B-27
4S4	B-27
4S5	C-27
4S6	A-28

Figure S-66. Radar set AN/VPS-2 simplified functional schematic (sheet 4 of 4).

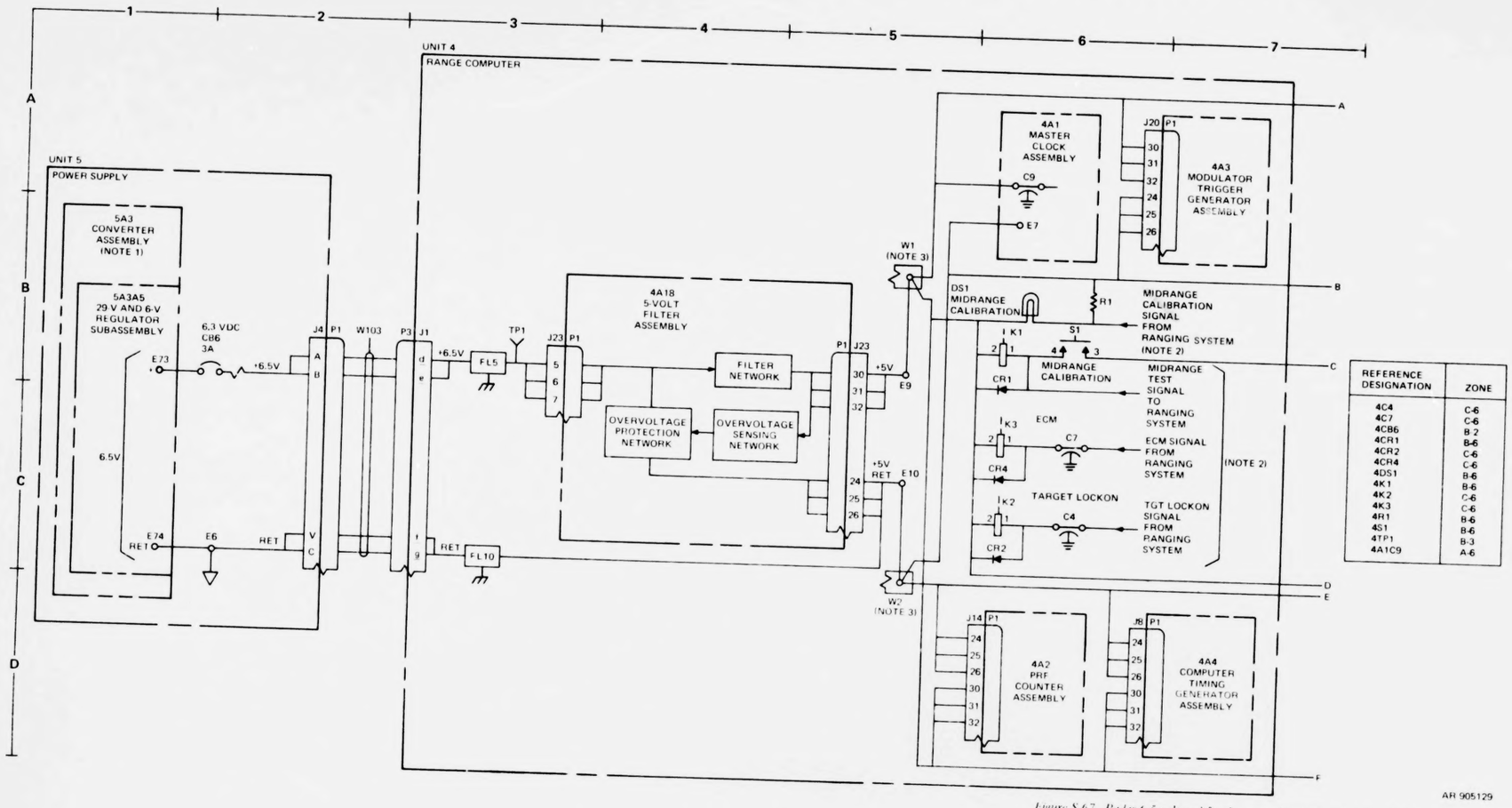

REFERENCE DESIGNATION	ZONE
4C4	C-6
4C7	C-6
4CB6	B-2
4CR1	B-6
4CR2	C-6
4CR4	C-6
4DS1	B-6
4K1	B-6
4K2	C-6
4K3	C-6
4R1	B-6
4S1	B-6
4TP1	B-3
4A1C9	A-6

Figure 8-67. Radar 6.5-volt and 5-volt power distribution functional schematic diagram (sheet 1 of 2)

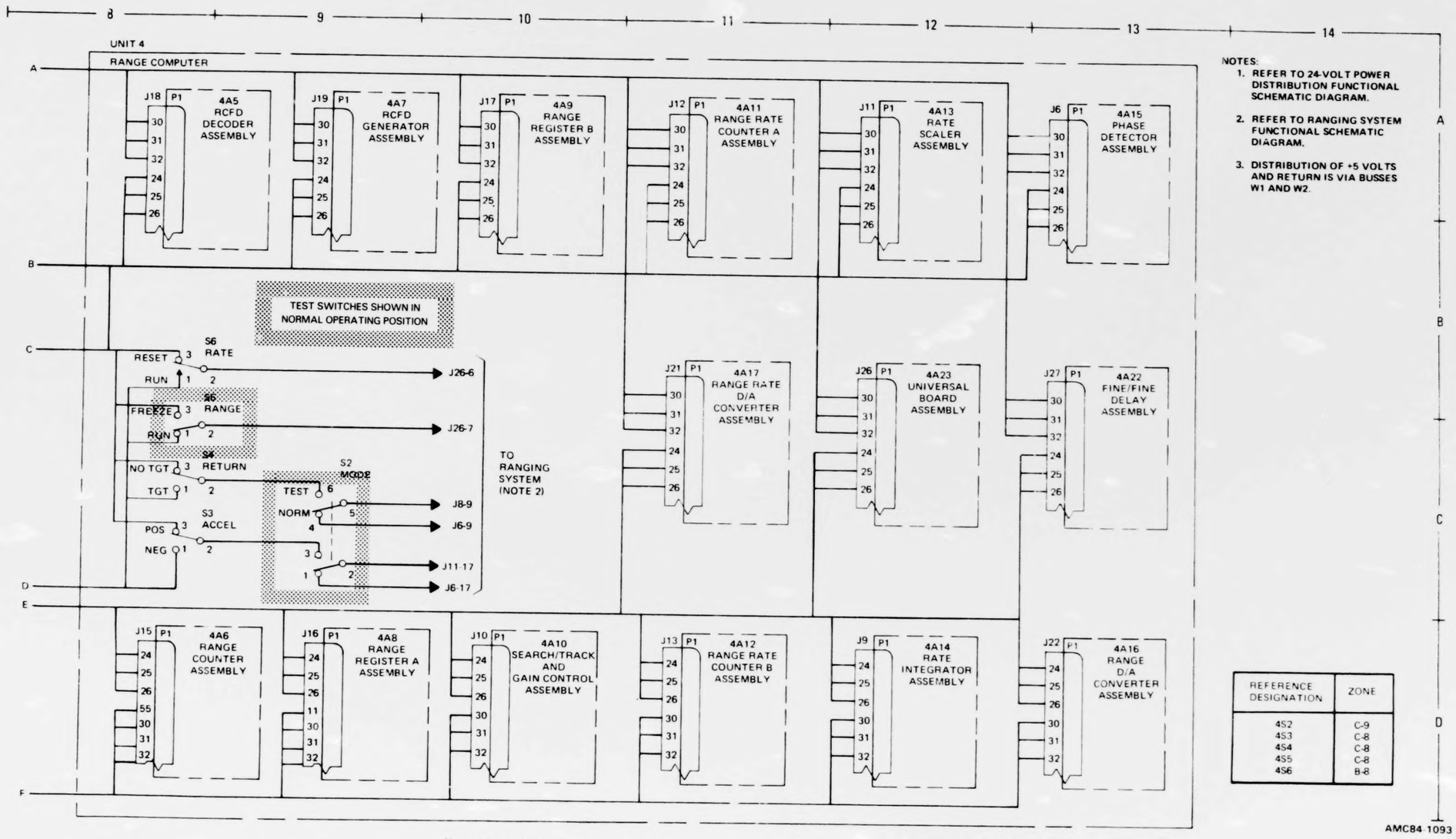

REFERENCE DESIGNATION	ZONE
4S2	C-9
4S3	C-8
4S4	C-8
4S5	C-8
4S6	B-8

Figure 8-67. Radar 6.5-volt and 5-volt power distribution functional schematic diagram (sheet 2 of 2).

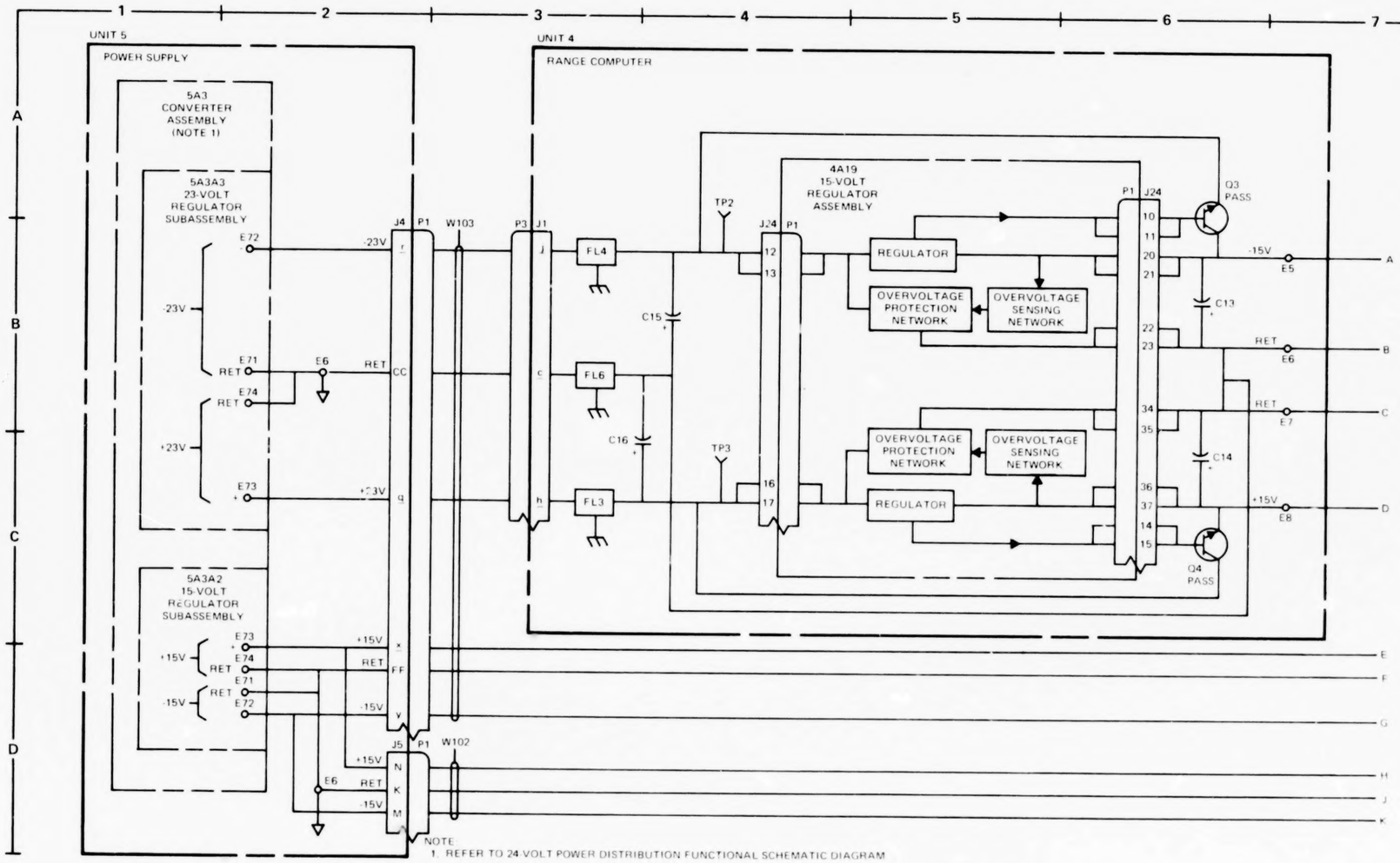

REFERENCE DESIGNATION	ZONE
4C13	B-6
4C14	C-6
4C15	B-4
4C16	C-4
4Q3	A-6
4Q4	C-6
4TB2	A-4
4TB3	C-4

AR 905131

Figure S-68. Radar 23-volt and 15-volt power distribution functional schematic diagram (Sheet 1 of 2).

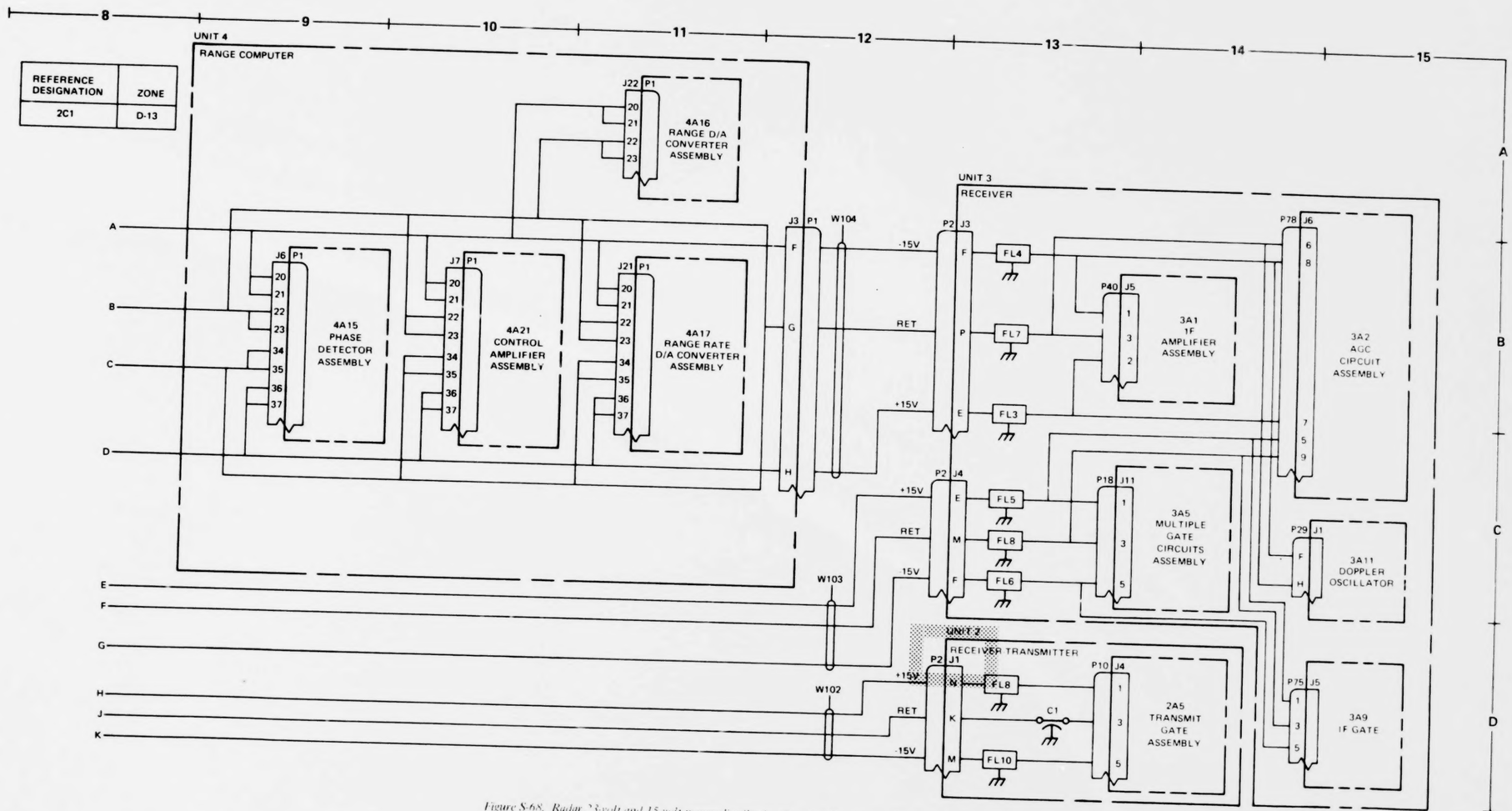

Figure 8-68. Radar 28-volt and 15-volt power distribution functional schematic diagram (sheet 2 of 2)

AMC84-1094

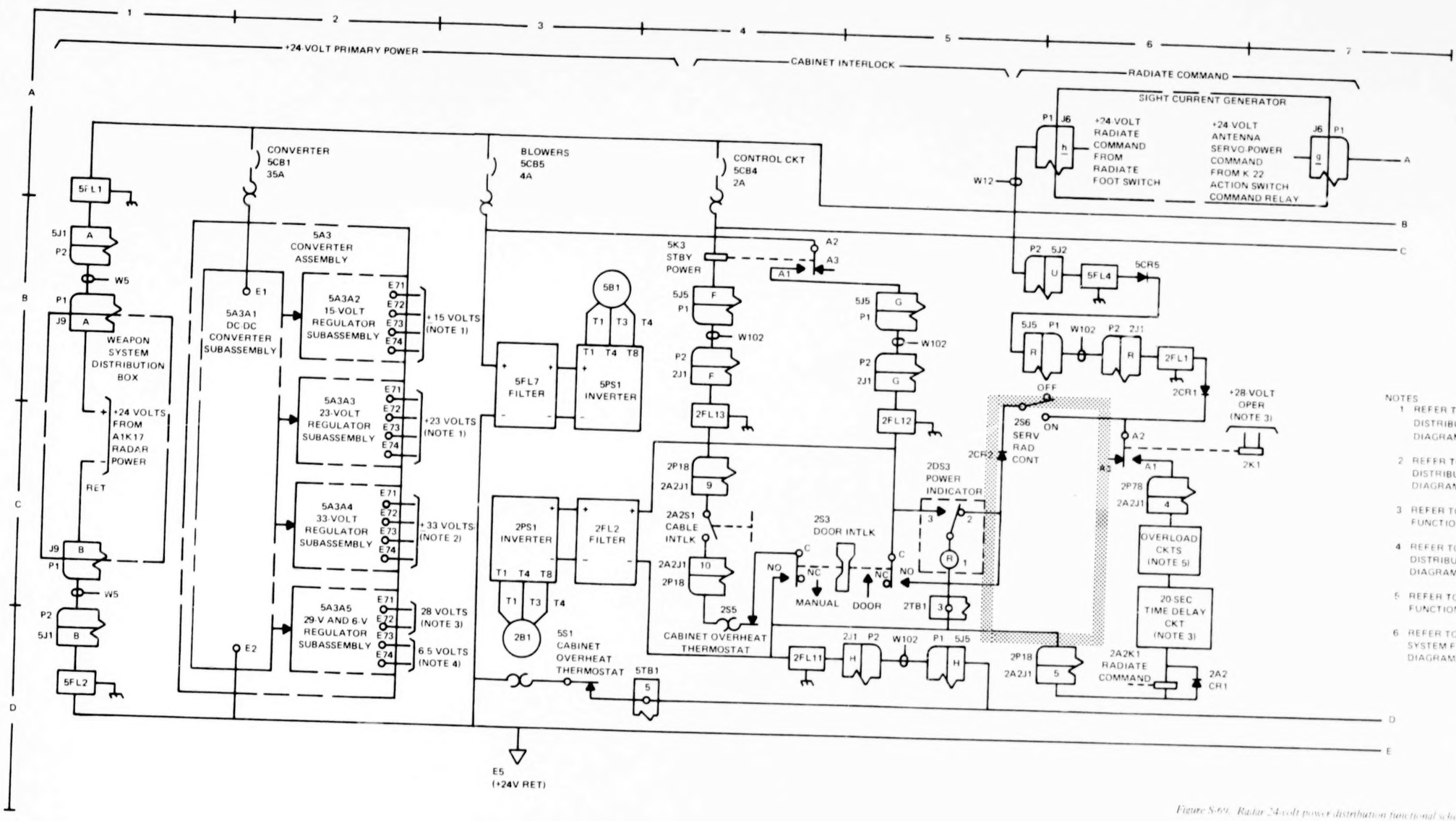

REFERENCE DESIGNATION	ZONE
2B1	D-3
2CR1	B-6
2CR2	C-5
2K1	C-6, C-7
2S3	C-4, C-5
2S5	C-4
2S6	B-5, B-6
2A2CR1	D-6
2A2K1	D-6
2A2S1	C-4
5CB1	A-2
5CB4	A-4
5CB5	A-3
5CR5	B-6
5S1	D-3

NOTES

1. REFER TO 23-VOLT AND 15-VOLT POWER DISTRIBUTION FUNCTIONAL SCHEMATIC DIAGRAM
2. REFER TO 33-VOLT AND 25-VOLT POWER DISTRIBUTION FUNCTIONAL SCHEMATIC DIAGRAM
3. REFER TO 28-VOLT POWER DISTRIBUTION FUNCTIONAL SCHEMATIC DIAGRAM
4. REFER TO 6.5-VOLT AND 5-VOLT POWER DISTRIBUTION FUNCTIONAL SCHEMATIC DIAGRAM
5. REFER TO TRANSMITTING SYSTEM FUNCTIONAL SCHEMATIC DIAGRAM
6. REFER TO ANTENNA POSITIONING SYSTEM FUNCTIONAL SCHEMATIC DIAGRAM

AMC84-1095

Figure 5-64. Radar 24-volt power distribution functional schematic diagram (sheet 1 of 2)

REFERENCE DESIGNATION	ZONE
1A2CR1	C-12
1A2L1	C-12
1A2S1	C-13
1A3CR1	C-9
1A3L1	C-9
1A3S1	D-9
5CB2	A-10
5CB3	A-11
5K1	C-11, C-12
5K2	C-10
5A1K1	B-8
5A1K2	B-9
5A1K3	B-9
5A2K1	B-13
5A2K2	B-12
5A2K3	A-13
6CR1	A-10
6CR2	B-10
6S1	C-8, D-8 B-10, B-11 C-13
6S2	B-10, C-10
6S3	B-11, C-11
6S4	B-10

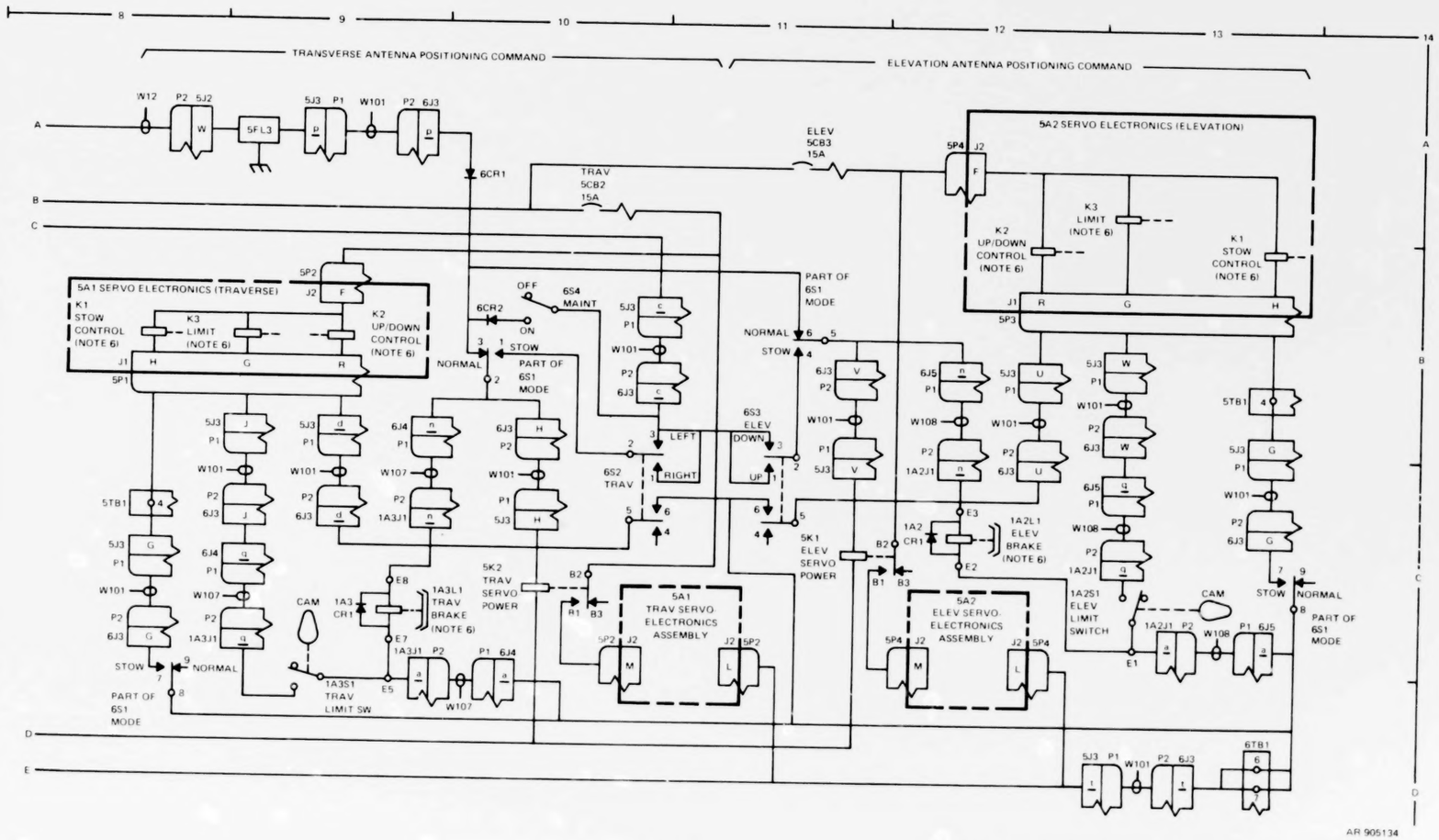

Figure S-69. Radar 24-volt power distribution functional schematic diagram (sheet 2 of 2).

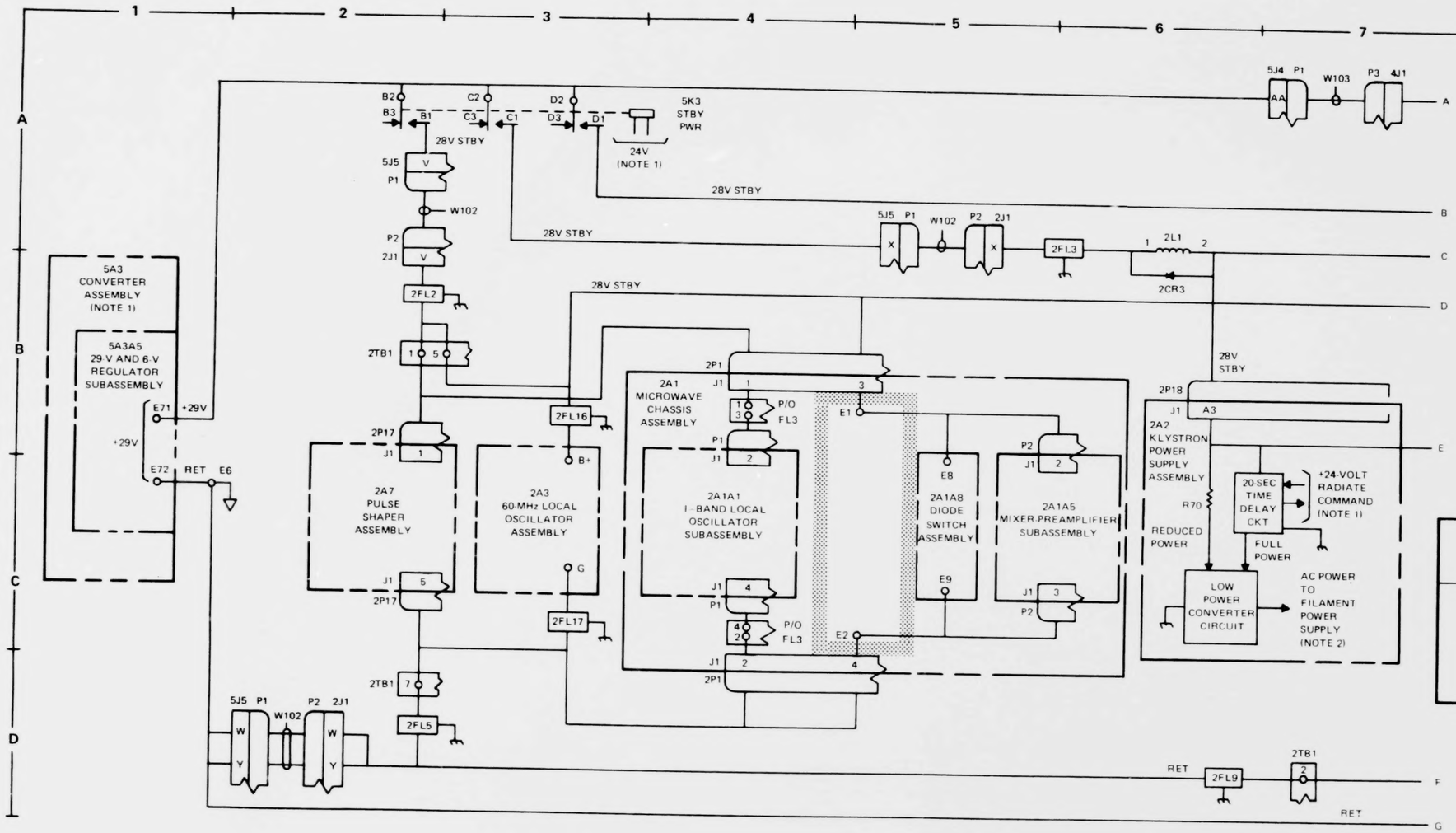

NOTES:

1. REFER TO +24-VOLT POWER DISTRIBUTION FUNCTIONAL SCHEMATIC DIAGRAM.
2. REFER TO TRANSMITTING SYSTEM FUNCTIONAL SCHEMATIC DIAGRAM.
3. REFER TO RECEIVING SYSTEM FUNCTIONAL SYSTEM DIAGRAM.

REFERENCE DESIGNATION	ZONE
2CR3	B-6
2L1	B-6
2A2R70	C-6
5K3	A-2, A-3

Figure 8-70. Radar 28-volt power distribution functional schematic diagram (sheet 1 of 2)

REFERENCE DESIGNATION	ZONE
2C3	D-9
2C4	D-9
2C5	D-9
2C6	D-9
2DS1	D-9
2DS2	D-9
2K1	B-10
2S1	B-9
2S2	A-12, A-13
2A2K1	C-10
2A2K2	C-8, C-9
2A2K3	C-9 C-10
3C4	D-14
3C5	B-14
3K1	C-14
4C17	A-9, A-10
4S1	A-9
5C1	B-11
5C2	B-11
5C3	B-11
5CR4	C-11
5K4	B-11, C-11
5K5	C-11

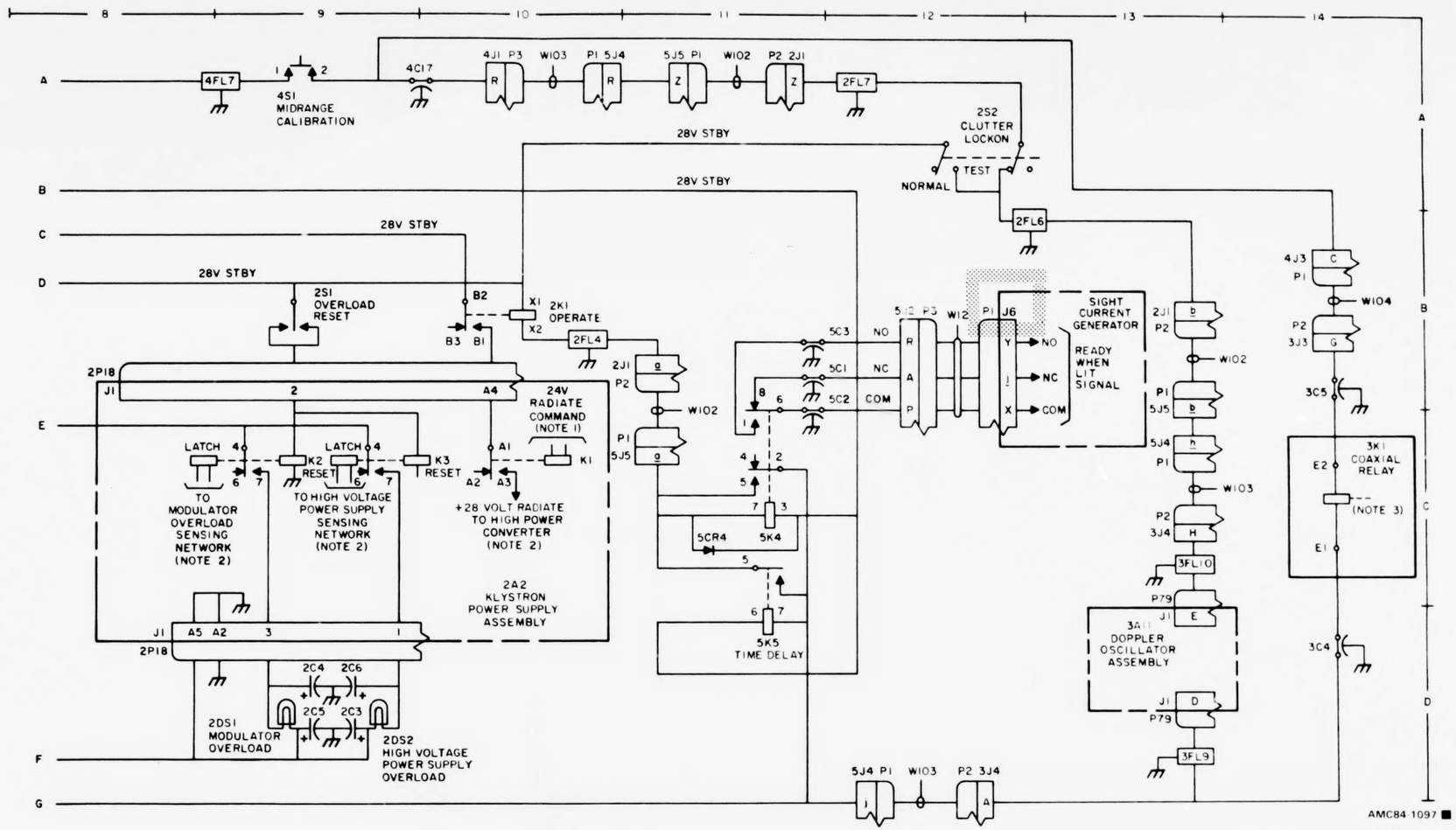

Figure S-70. Radar 28-volt power distribution functional schematic diagram (sheet 2 of 2).

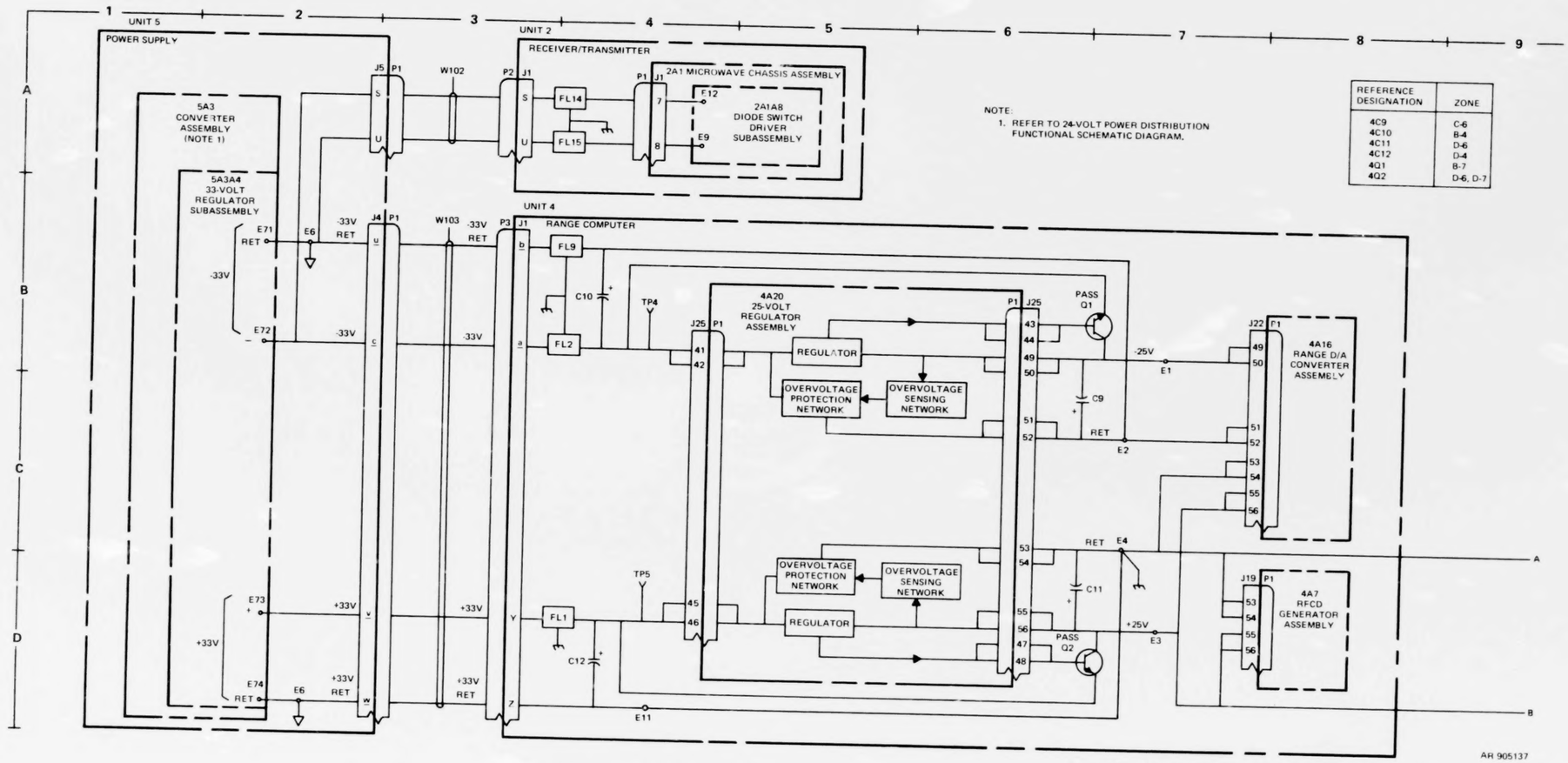

NOTE:
1. REFER TO 24-VOLT POWER DISTRIBUTION FUNCTIONAL SCHEMATIC DIAGRAM.

REFERENCE DESIGNATION	ZONE
4C9	C-6
4C10	B-4
4C11	D-6
4C12	D-4
4Q1	B-7
4Q2	D-6, D-7

Figure S-71. Radar 33-volt and 25-volt power distribution functional schematic diagram (sheet 1 of 2).

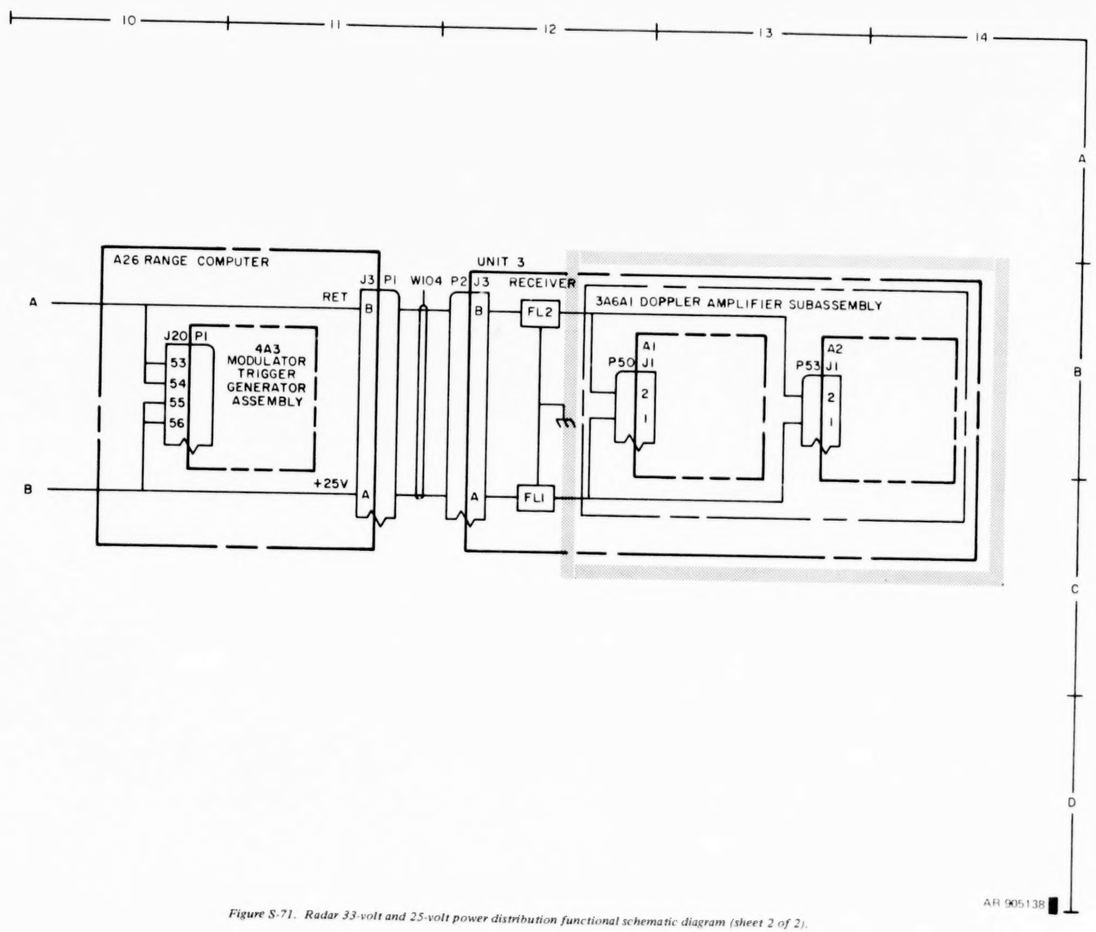

Figure S-71. Radar 33-volt and 25-volt power distribution functional schematic diagram (sheet 2 of 2).

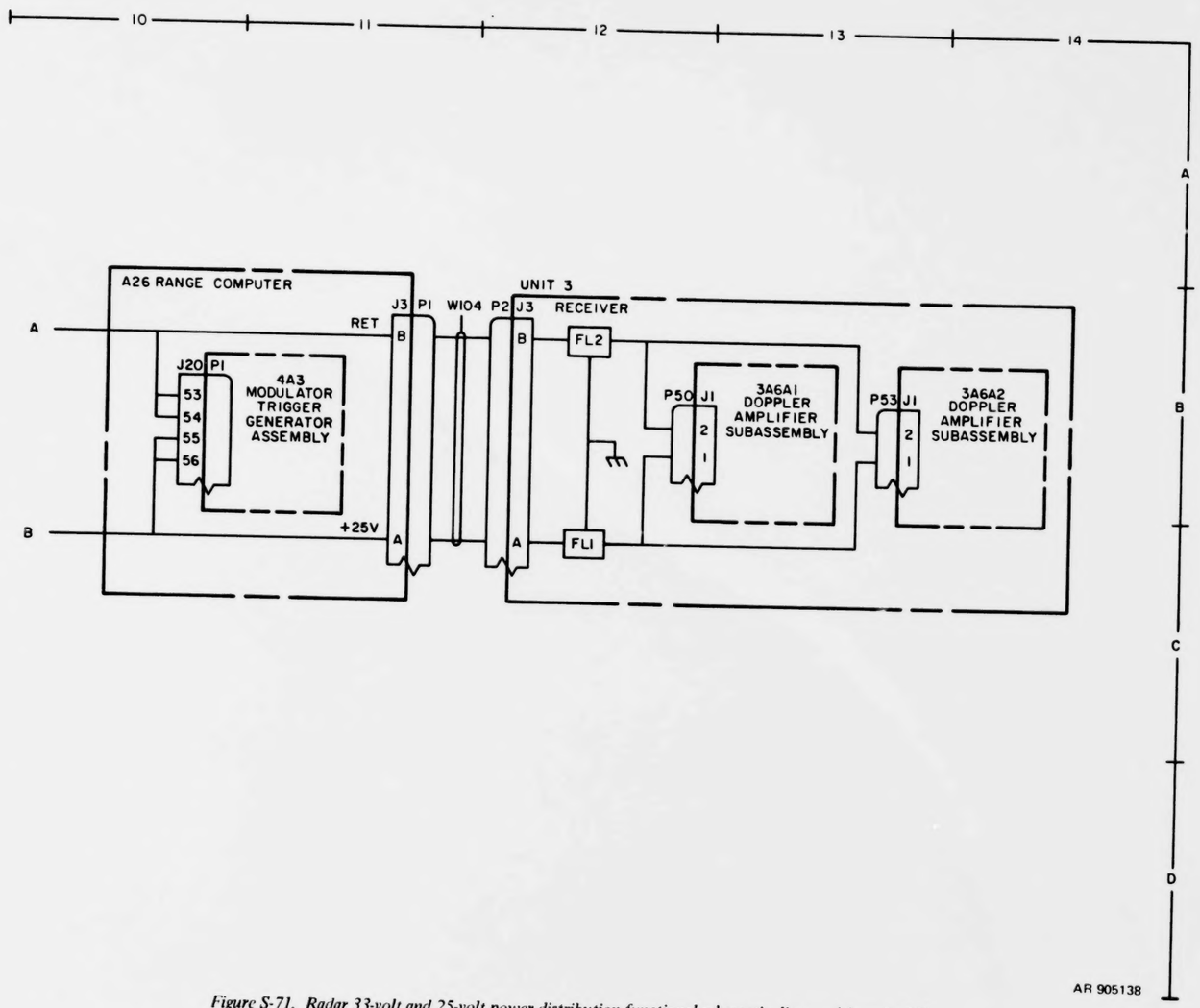

Figure S-71. Radar 33-volt and 25-volt power distribution functional schematic diagram (sheet 2 of 2).

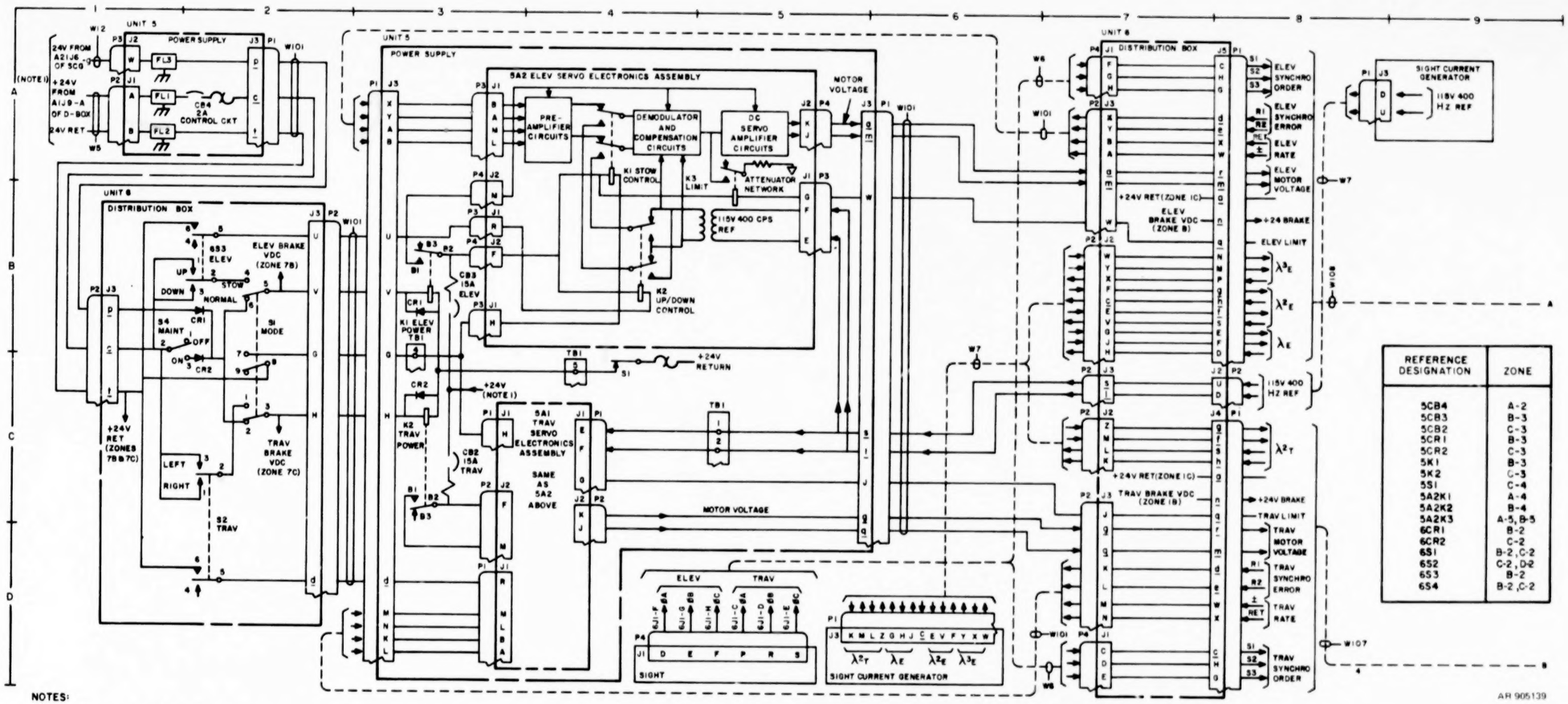

REFERENCE DESIGNATION	ZONE
5CB4	A-2
5CB3	B-3
5CB2	C-3
5CR1	B-3
5CR2	C-3
5K1	B-3
5K2	C-3
5S1	C-4
5A2K1	A-4
5A2K2	B-4
5A2K3	A-5, B-5
6CR1	B-2
6CR2	C-2
6S1	B-2, C-2
6S2	C-2, D-2
6S3	B-2
6S4	B-2, C-2

NOTES:

1. REFER TO +24-VOLT POWER DISTRIBUTION FUNCTIONAL SCHEMATIC DIAGRAM.

Figure S-72. Radar antenna positioning system functional schematic diagram (sheet 1 of 2).

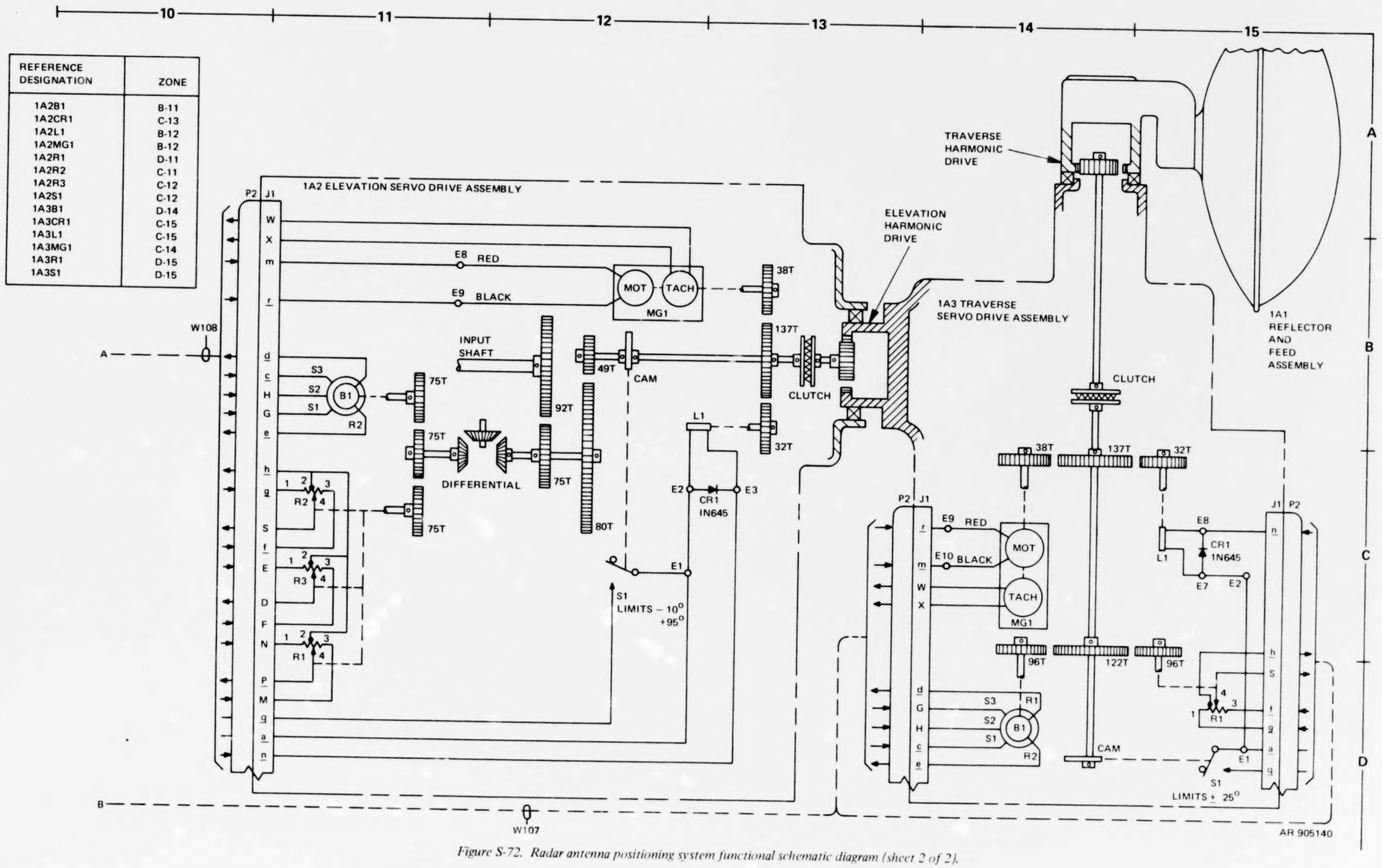

REFERENCE DESIGNATION	ZONE
1A2B1	B-11
1A2CR1	C-13
1A2L1	B-12
1A2MG1	B-12
1A2R1	D-11
1A2R2	C-11
1A2R3	C-12
1A2S1	C-12
1A3B1	D-14
1A3CR1	C-15
1A3L1	C-15
1A3MG1	C-14
1A3R1	D-15
1A3S1	D-15

Figure S-72. Radar antenna positioning system functional schematic diagram (sheet 2 of 2).

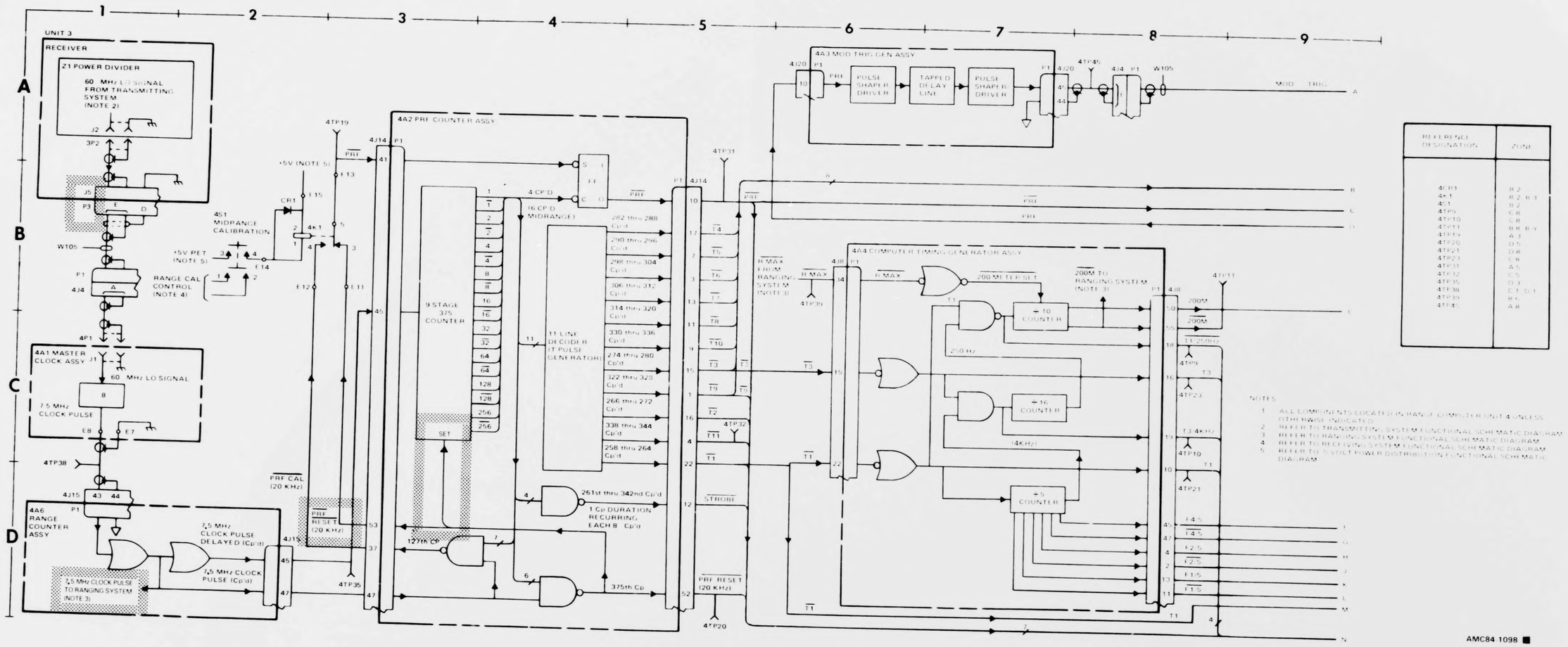

REFERENCE DESIGNATION	ZONE
4CR1	B 2
4×1	B 2, B 3
4S1	B 2
4TP6	C 8
4TP10	C 8
4TP11	B 8, B 9
4TP14	A 3
4TP20	D 5
4TP21	D 8
4TP23	C 8
4TP31	A 5
4TP32	C 5
4TP35	D 3
4TP38	C 1, D 1
4TP39	B 5
4TP45	A 8

Figure 5-73. Radar synchronizing system functional schematic diagram (sheet 1 of 2).

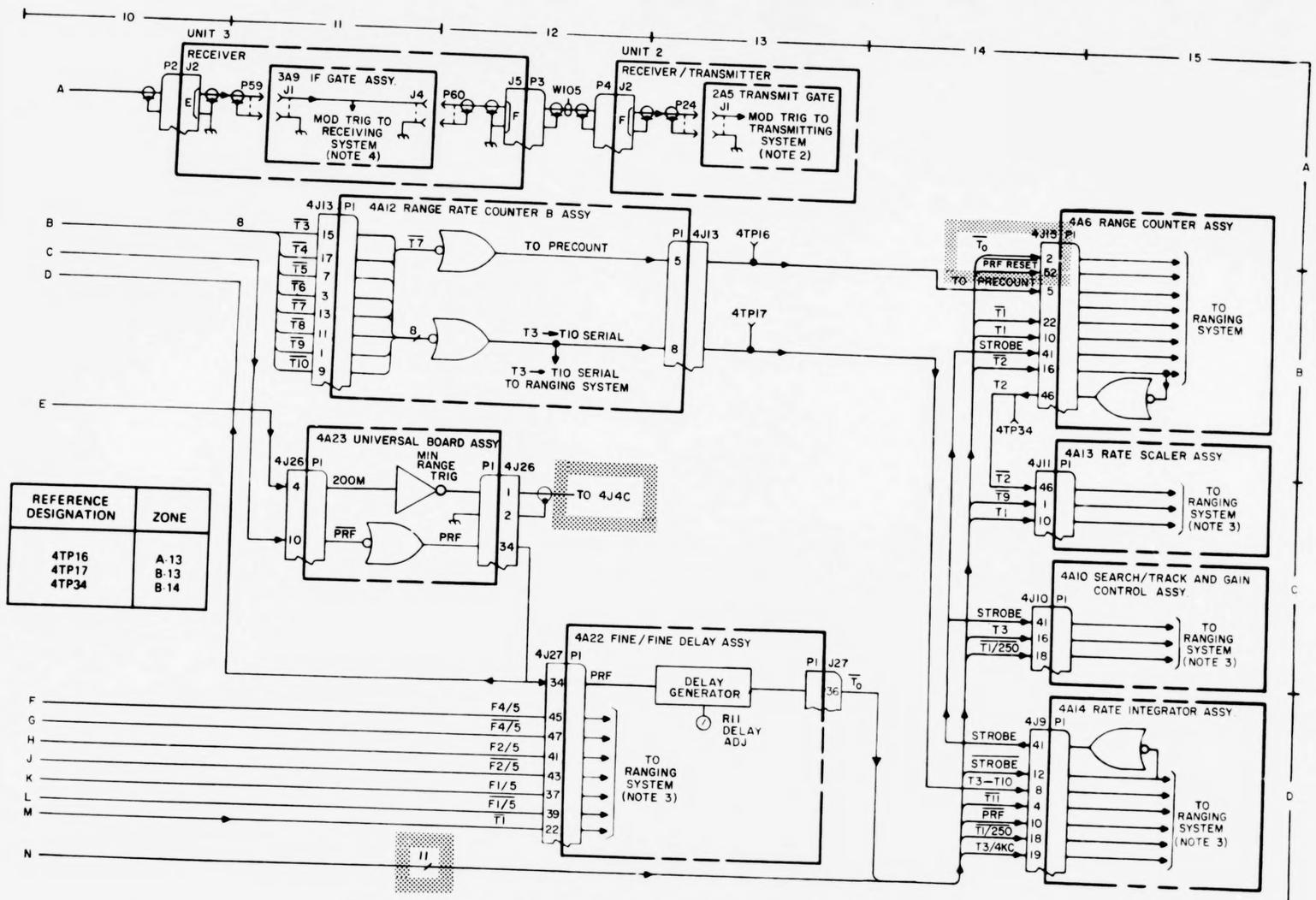

Figure S-73. Radar synchronizing system functional schematic diagram (sheet 2 of 2).

AMC84-1099

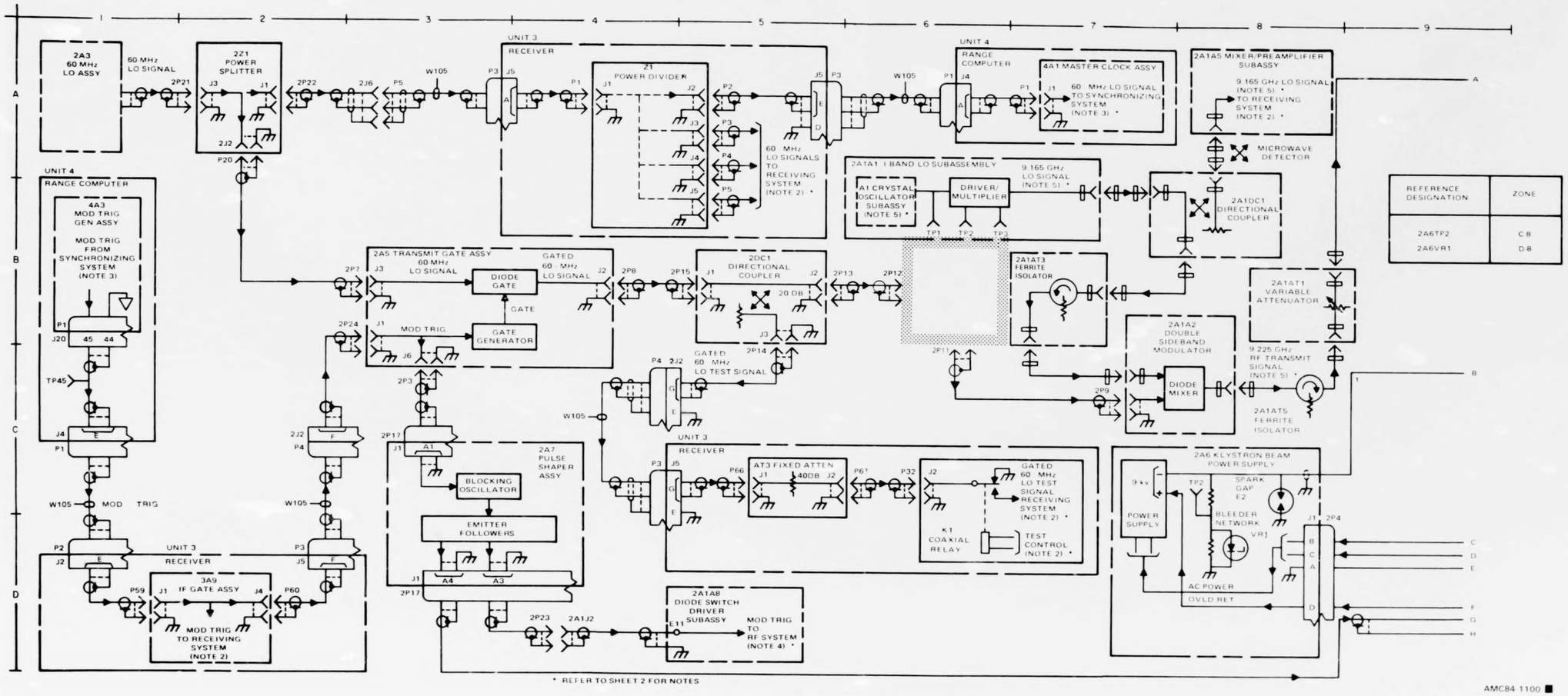

REFERENCE DESIGNATION	ZONE
2A6TP2	C-8
2A6VR1	D-8

Figure S-74. Radar transmitting system functional schematic diagram (sheet 1 of 2)

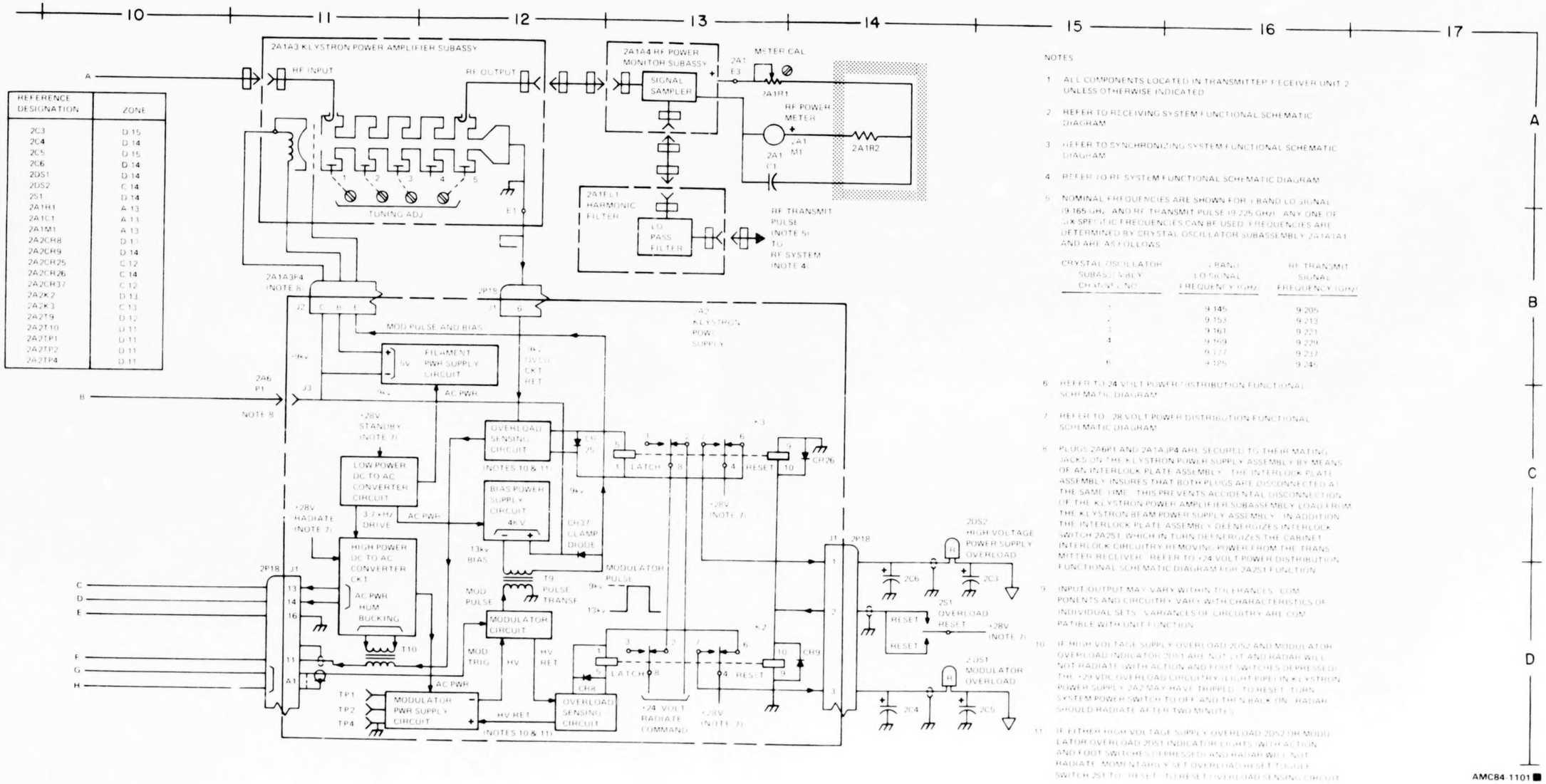

REFERENCE DESIGNATION	ZONE
2C3	D 15
2C4	D 14
2C5	D 15
2C6	D 14
2DS1	D 14
2DS2	C 14
2S1	D 14
2A1R1	A 13
2A1C1	A 13
2A1M1	A 13
2A2CR8	D 11
2A2CR9	D 14
2A2CR25	C 12
2A2CR26	C 14
2A2CR37	C 12
2A2K2	D 13
2A2K3	C 13
2A2T9	D 12
2A2T10	D 11
2A2TP1	D 11
2A2TP2	D 11
2A2TP4	D 11

NOTES

1. ALL COMPONENTS LOCATED IN TRANSMITTER RECEIVER UNIT 2 UNLESS OTHERWISE INDICATED.
2. REFER TO RECEIVING SYSTEM FUNCTIONAL SCHEMATIC DIAGRAM.
3. REFER TO SYNCHRONIZING SYSTEM FUNCTIONAL SCHEMATIC DIAGRAM.
4. REFER TO RF SYSTEM FUNCTIONAL SCHEMATIC DIAGRAM.
5. NOMINAL FREQUENCIES ARE SHOWN FOR I BAND LO SIGNAL (9.165 GHz) AND RF TRANSMIT PULSE (9.225 GHz). ANY ONE OF SIX SPECIFIC FREQUENCIES CAN BE USED. FREQUENCIES ARE DETERMINED BY CRYSTAL OSCILLATOR SUBASSEMBLY 2A1A1A1 AND ARE AS FOLLOWS:

CRYSTAL OSCILLATOR SUBASSEMBLY CHANNEL NO.	I BAND LO SIGNAL FREQUENCY (GHz)	RF TRANSMIT SIGNAL FREQUENCY (GHz)
1	9.145	9.205
2	9.153	9.213
3	9.161	9.221
4	9.169	9.229
5	9.177	9.237
6	9.185	9.245

6. REFER TO 24 VOLT POWER DISTRIBUTION FUNCTIONAL SCHEMATIC DIAGRAM.
7. REFER TO 28 VOLT POWER DISTRIBUTION FUNCTIONAL SCHEMATIC DIAGRAM.
8. PLUGS 2A6P1 AND 2A1A3P4 ARE SECURED TO THEIR MATING JACKS ON THE KLYSTRON POWER SUPPLY ASSEMBLY BY MEANS OF AN INTERLOCK PLATE ASSEMBLY. THE INTERLOCK PLATE ASSEMBLY INSURES THAT BOTH PLUGS ARE DISCONNECTED AT THE SAME TIME. THIS PREVENTS ACCIDENTAL DISCONNECTION OF THE KLYSTRON POWER AMPLIFIER SUBASSEMBLY LOAD FROM THE KLYSTRON BEAM POWER SUPPLY ASSEMBLY. IN ADDITION THE INTERLOCK PLATE ASSEMBLY DEENERGIZES INTERLOCK SWITCH 2A2S1 WHICH IN TURN DEENERGIZES THE CABINET INTERLOCK CIRCUITRY REMOVING POWER FROM THE TRANSMITTER RECEIVER. REFER TO +24 VOLT POWER DISTRIBUTION FUNCTIONAL SCHEMATIC DIAGRAM FOR 2A2S1 FUNCTION.
9. INPUT/OUTPUT MAY VARY WITHIN TOLERANCES. COMPONENTS AND CIRCUITRY VARY WITH CHARACTERISTICS OF INDIVIDUAL SETS. VARIANCES OF CIRCUITRY ARE COMPATIBLE WITH UNIT FUNCTION.
10. IF HIGH VOLTAGE SUPPLY OVERLOAD 2DS2 AND MODULATOR OVERLOAD INDICATOR 2DS1 ARE NOT LIT AND RADAR WILL NOT RADIATE (WITH ACTION AND FOOT SWITCHES DEPRESSED) THE +28 VDC OVERLOAD CIRCUITRY (LIGHT PIPE IN KLYSTRON POWER SUPPLY 2A2 MAY HAVE TRIPPED). TO RESET: TURN SYSTEM POWER SWITCH TO OFF AND THEN BACK ON. RADAR SHOULD RADIATE AFTER TWO MINUTES.
11. IF EITHER HIGH VOLTAGE SUPPLY OVERLOAD 2DS2 OR MODULATOR OVERLOAD 2DS1 INDICATOR LIGHTS (WITH ACTION AND FOOT SWITCHES DEPRESSED) AND RADAR WILL NOT RADIATE: MOMENTARILY SET OVERLOAD RESET TOGGLE SWITCH 2S1 TO "RESET" TO RESET OVERLOAD SENSING CIRCUIT.

Figure 8-24. Radar transmitting station functional schematic diagram (sheet 2 of 2).

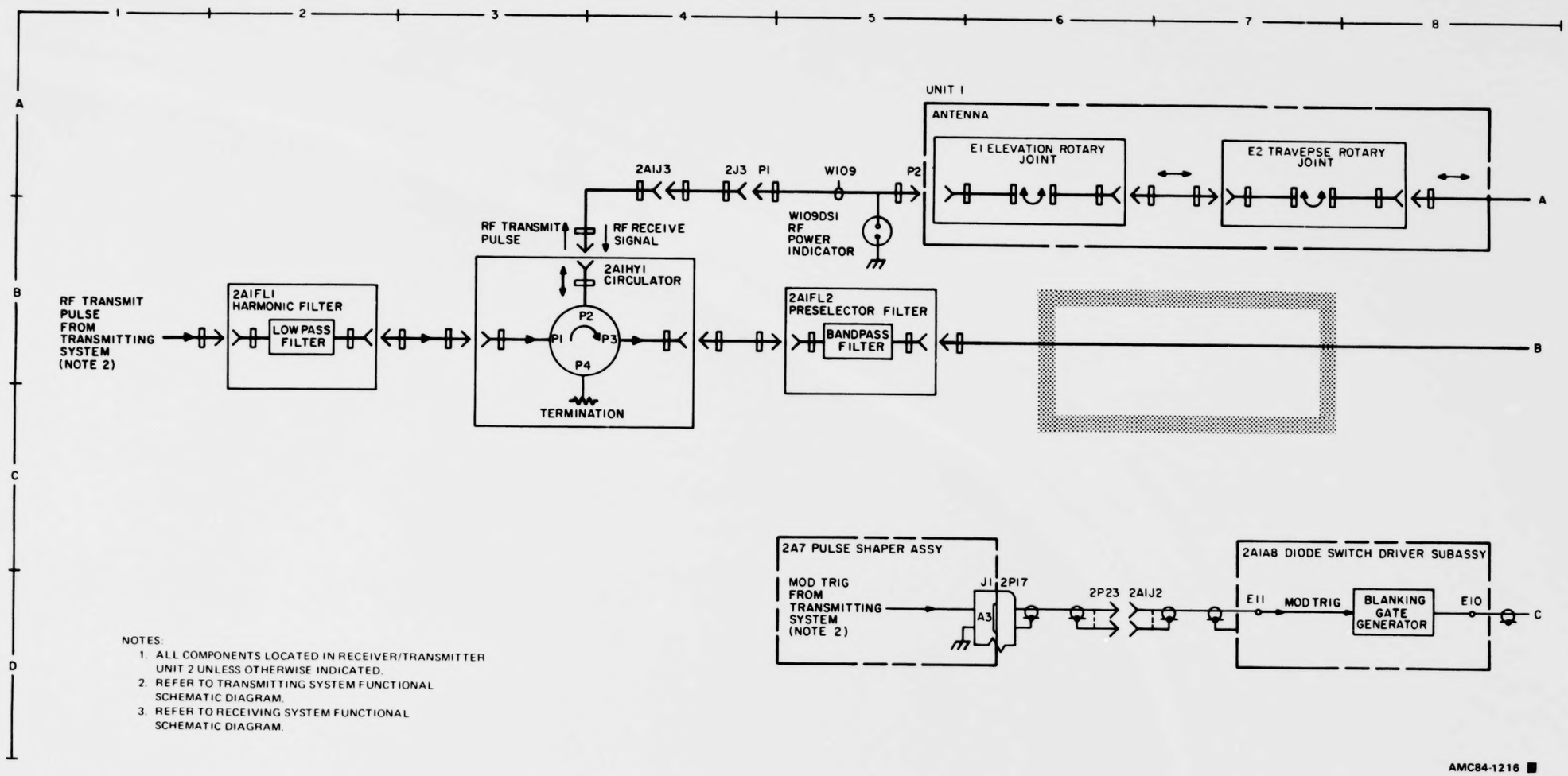

NOTES:

1. ALL COMPONENTS LOCATED IN RECEIVER/TRANSMITTER UNIT 2 UNLESS OTHERWISE INDICATED.
2. REFER TO TRANSMITTING SYSTEM FUNCTIONAL SCHEMATIC DIAGRAM.
3. REFER TO RECEIVING SYSTEM FUNCTIONAL SCHEMATIC DIAGRAM.

Figure S-75. RF system functional schematic diagram (sheet 1 of 2).

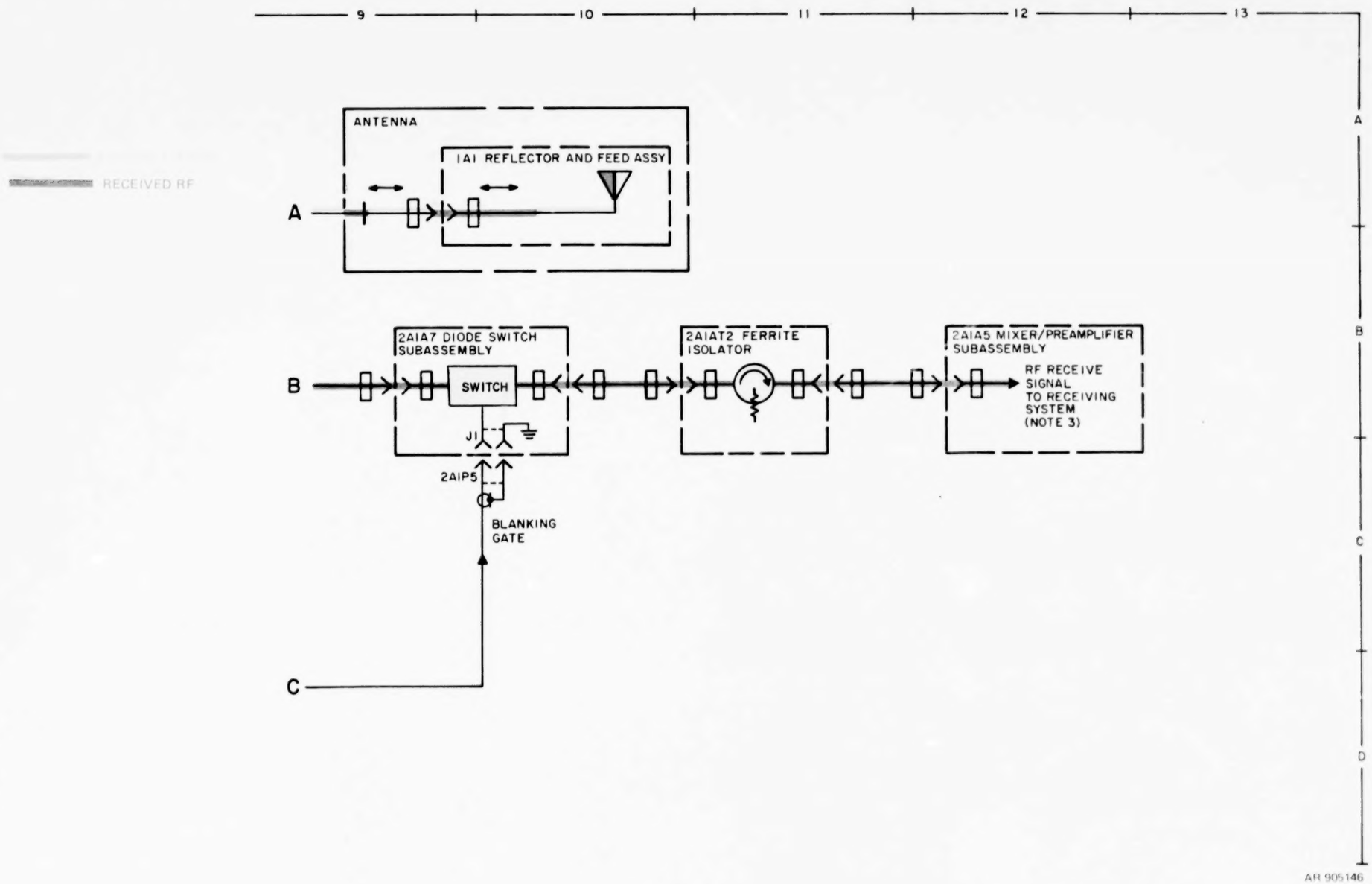

Figure S-75. RF system functional schematic diagram (sheet 2 of 2).

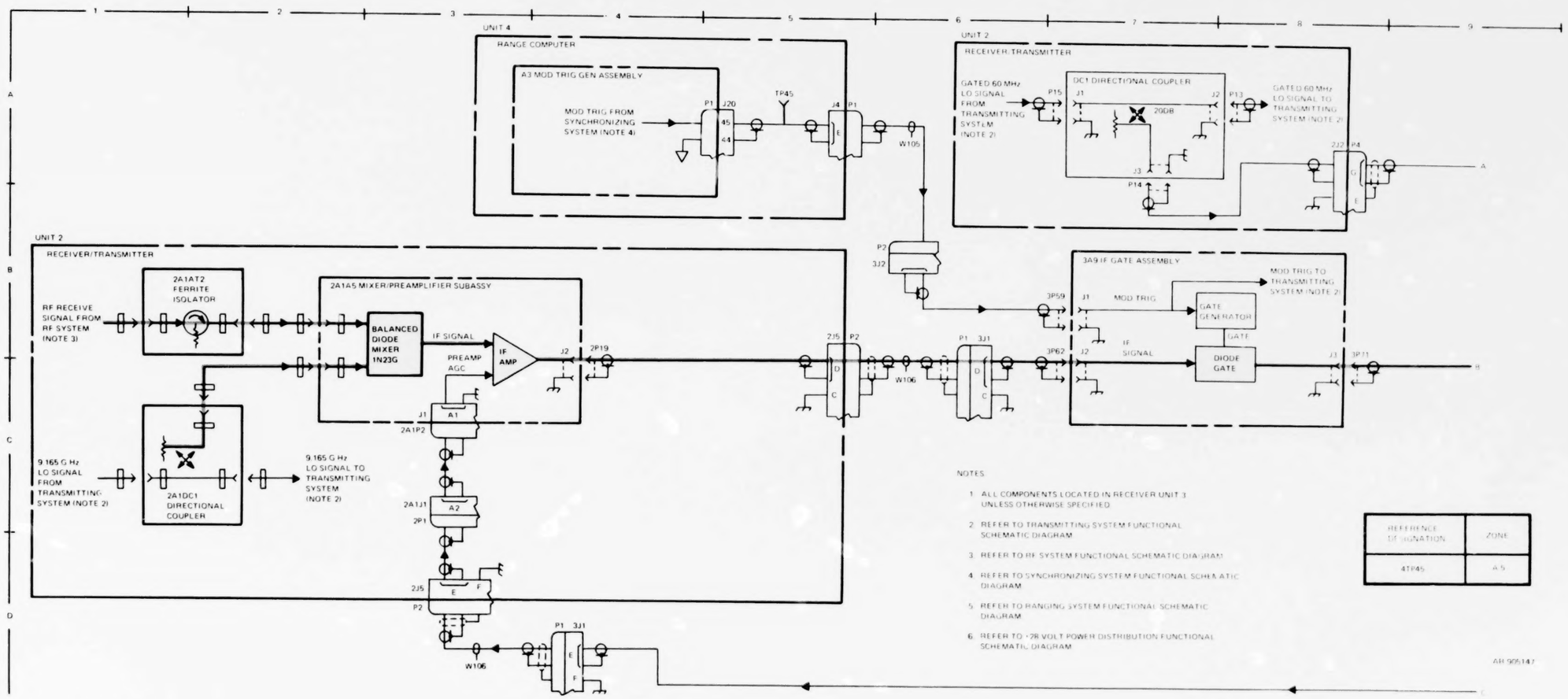

Figure 5-76. Radar receiving system functional schematic diagram (Sheet 1 of 4).

RECEIVED RF

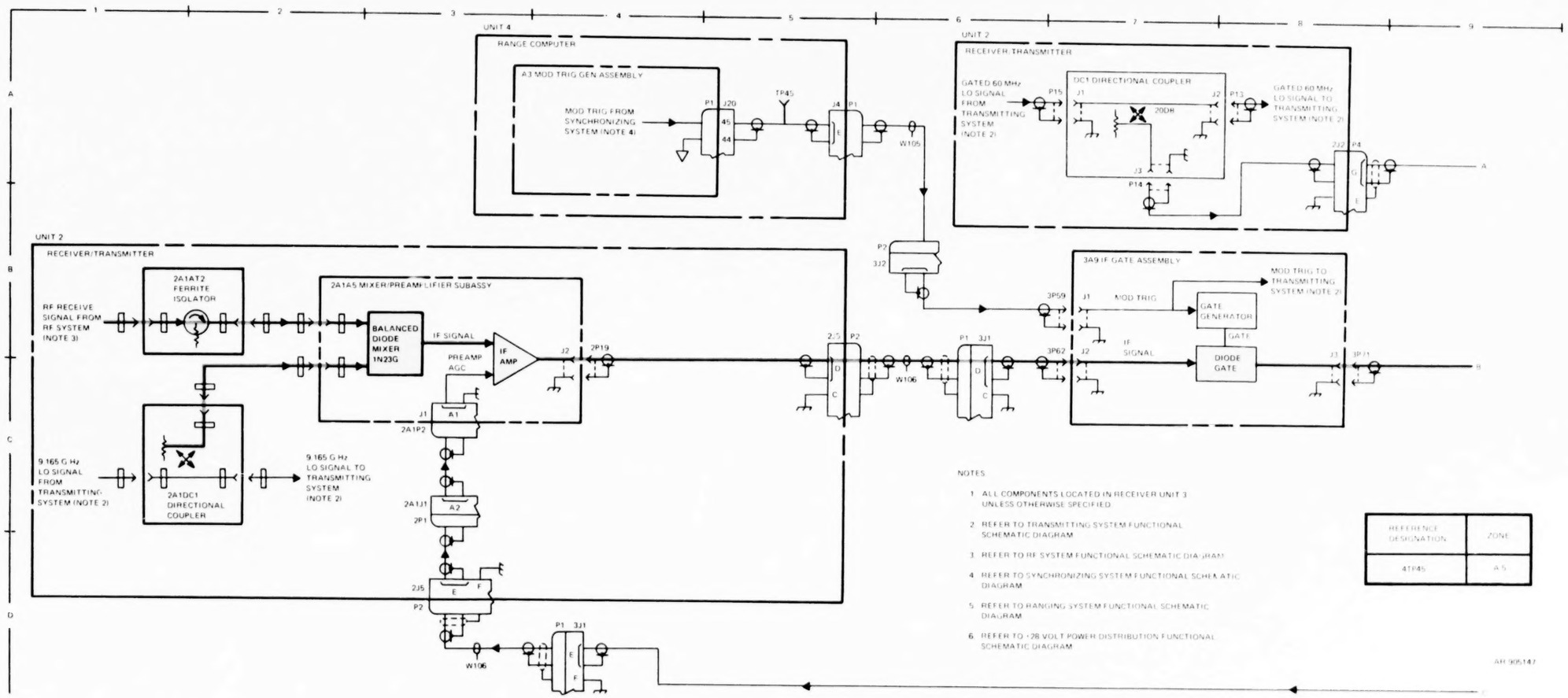

REFERENCE DESIGNATION	ZONE
4TP45	A 5

Figure 5-7b. Radar receiving system functional schematic diagram (sheet 1 of 4).

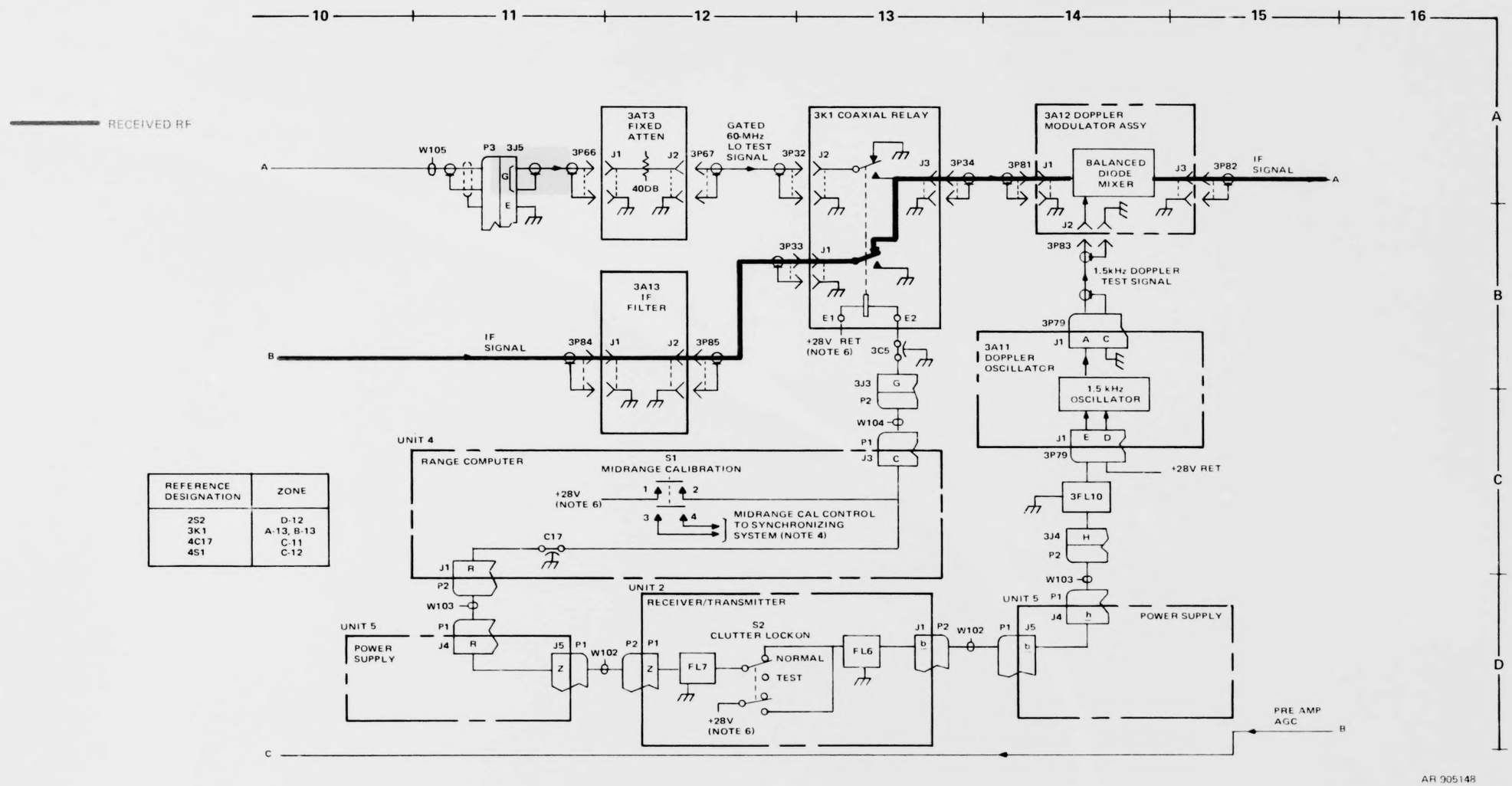

REFERENCE DESIGNATION	ZONE
2S2	D-12
3K1	A-13, B-13
4C17	C-11
4S1	C-12

AR 905148

Figure S-76. Radar receiving system functional schematic diagram (sheet 2 of 4).

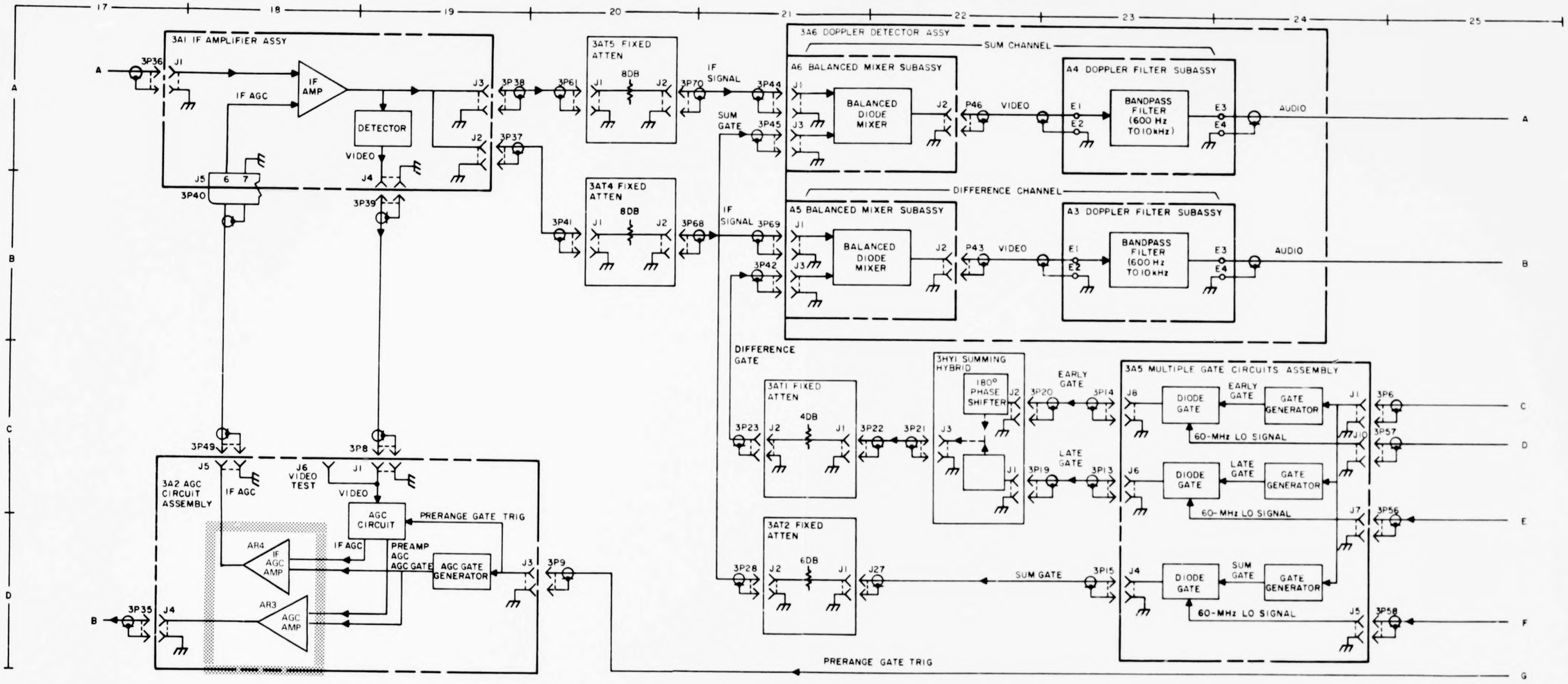

Figure 3-26. Radar receiving system functional schematic diagram (sheet 3 of 4).

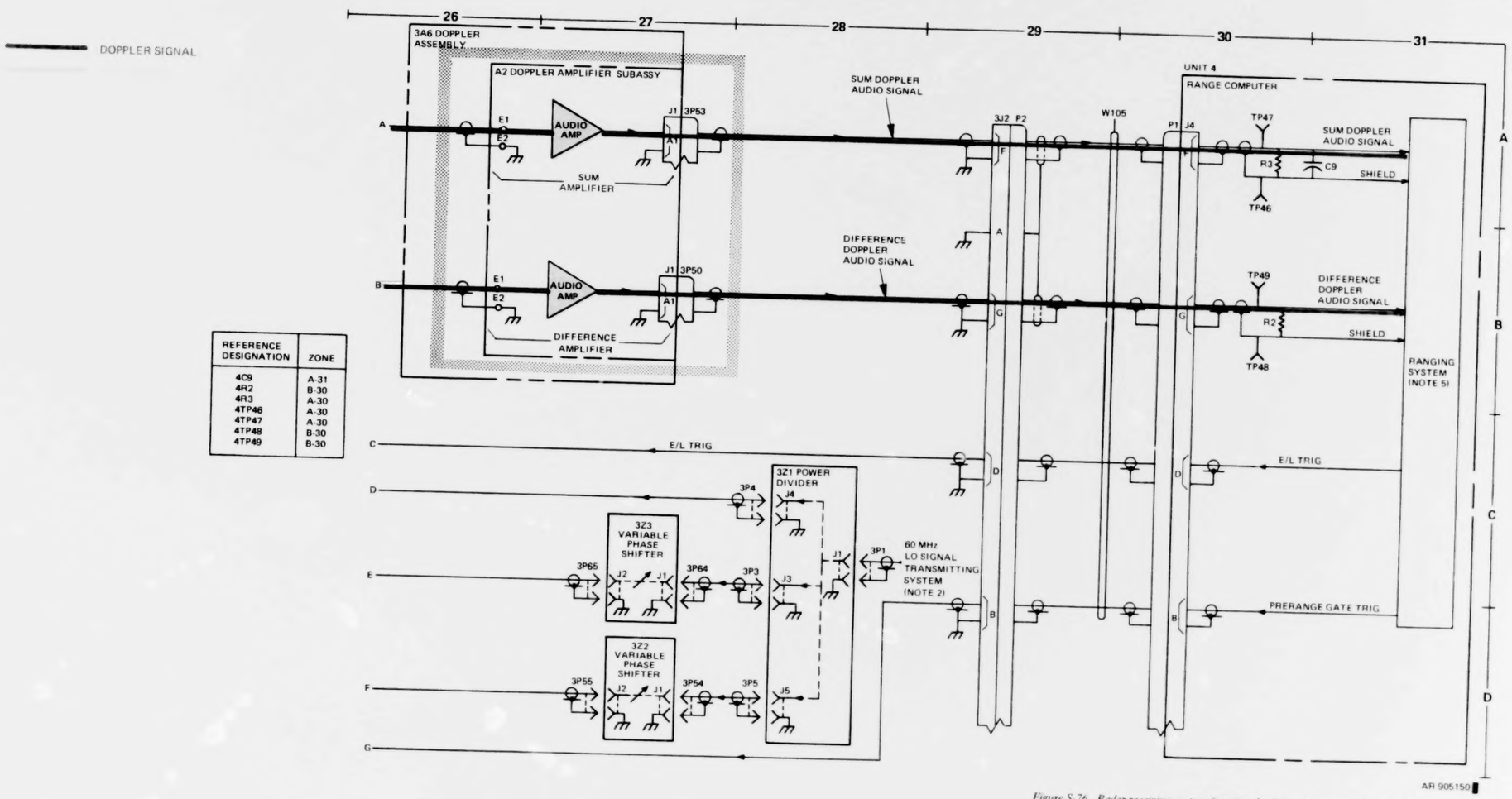

REFERENCE DESIGNATION	ZONE
4C9	A-31
4R2	B-30
4R3	A-30
4TP46	A-30
4TP47	A-30
4TP48	B-30
4TP49	B-30

Figure S-76. Radar receiving system functional schematic diagram (sheet 4 of 4).

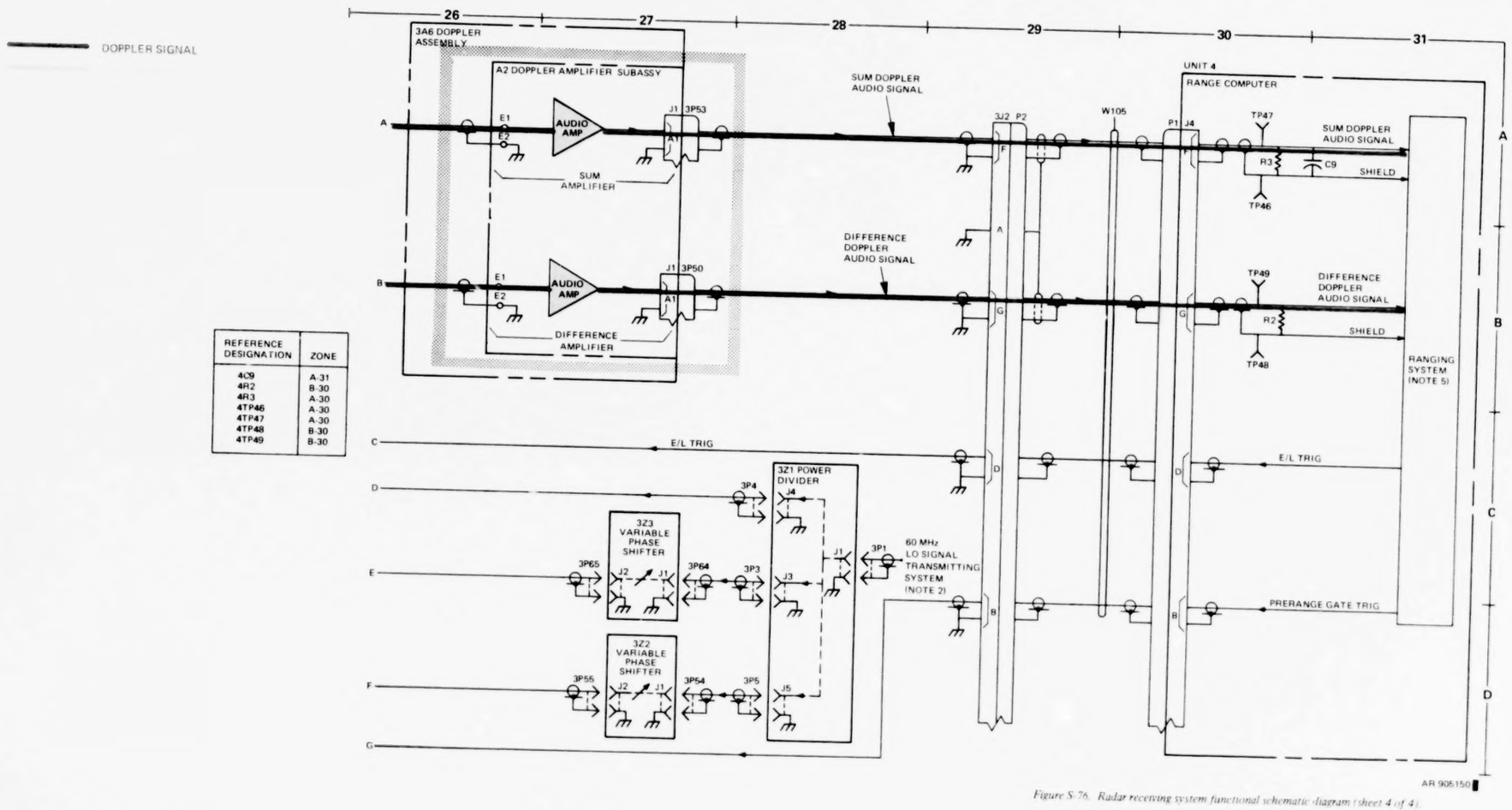

REFERENCE DESIGNATION	ZONE
4C9	A-31
4R2	B-30
4R3	A-30
4TP46	A-30
4TP47	A-30
4TP48	B-30
4TP49	B-30

Figure 5-76. Radar receiving system functional schematic diagram (sheet 4 of 4).

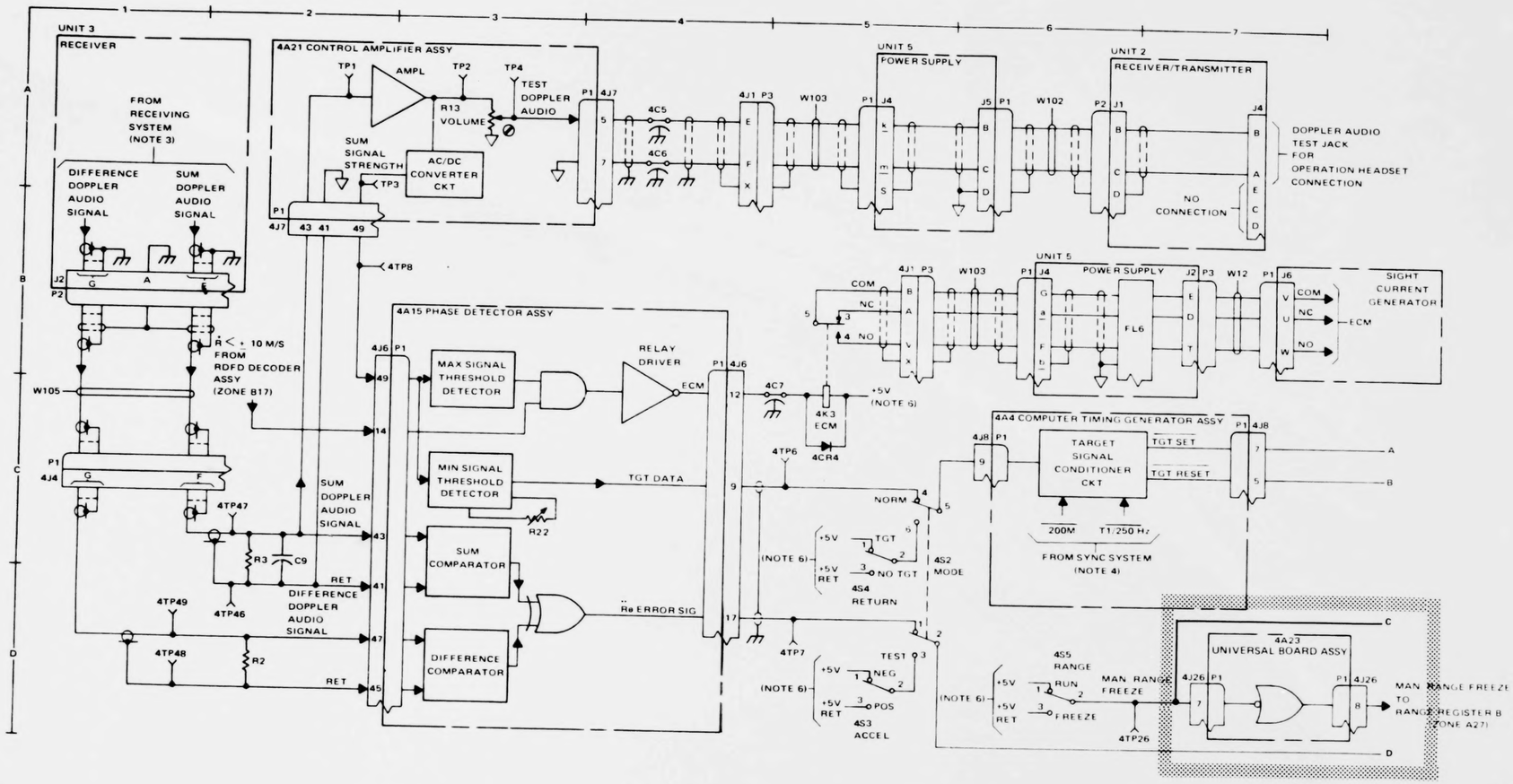

NOTES

1. ALL COMPONENTS LOCATED IN RANGE COMPUTER UNIT 4 UNLESS OTHERWISE SPECIFIED.
2. MIDRANGE CALIBRATION INDICATOR LAMP 4DS1 BLINKS AT 1 CPS RATE DURING SEARCH MODE. IN TRACK MODE 4DS1 ILLUMINATES WHEN TARGET RANGE IS BETWEEN 2400 METERS AND 2560 METERS.
3. REFER TO RECEIVING SYSTEM FUNCTIONAL SCHEMATIC DIAGRAM.
4. REFER TO SYNCHRONIZING SYSTEM FUNCTIONAL SCHEMATIC DIAGRAM.
5. REFER TO +15 VOLT POWER DISTRIBUTION FUNCTIONAL SCHEMATIC DIAGRAM.
6. REFER TO +5 VOLT POWER DISTRIBUTION FUNCTIONAL SCHEMATIC DIAGRAM.

REFERENCE DESIGNATION	ZONE
4C5	A 4
4C6	A 4
4C7	C 5
4C9	C 2, D 2
4CR4	C 5
4K3	B 5, C 5
4R2	D 2
4R3	C 2, D 2
4S2	C 5, D 5
4S3	D 5
4S4	C 5
4S5	D 6
4TPC	C 5
4TP7	D 5
4TP8	B 2
4TP26	D 6
4TP46	D 2
4TP47	C 2
4TP48	D 1
4TP49	D 1
4A21R13	A 3
4A21TP1	A 2
4A21TP2	A 3
4A21TP3	A 2
4A21TP4	A 3

AMC84-1103

Figure S-77. Radar ranging system functional schematic diagram (sheet 1 of 6).

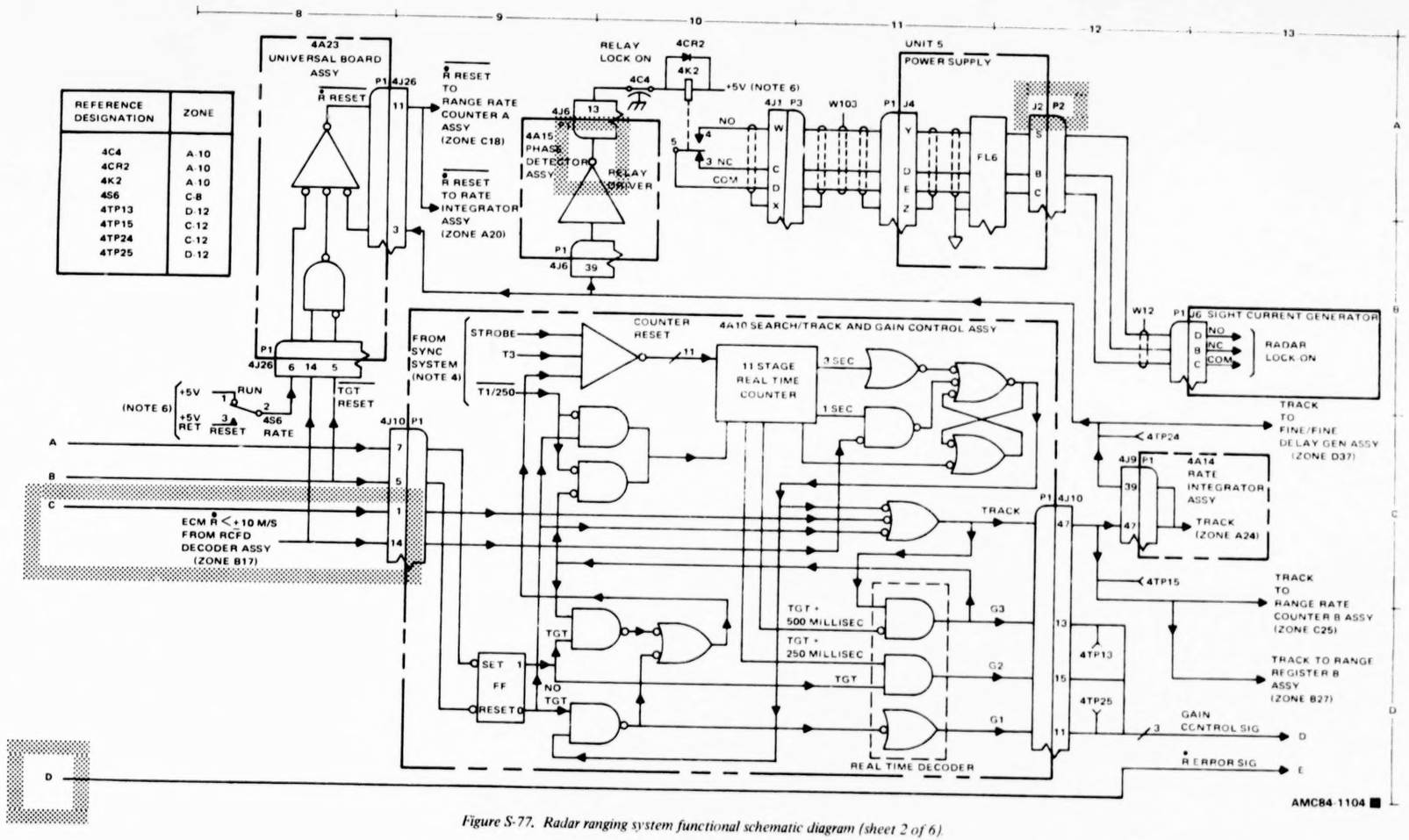

Figure S-77. Radar ranging system functional schematic diagram (sheet 2 of 6).

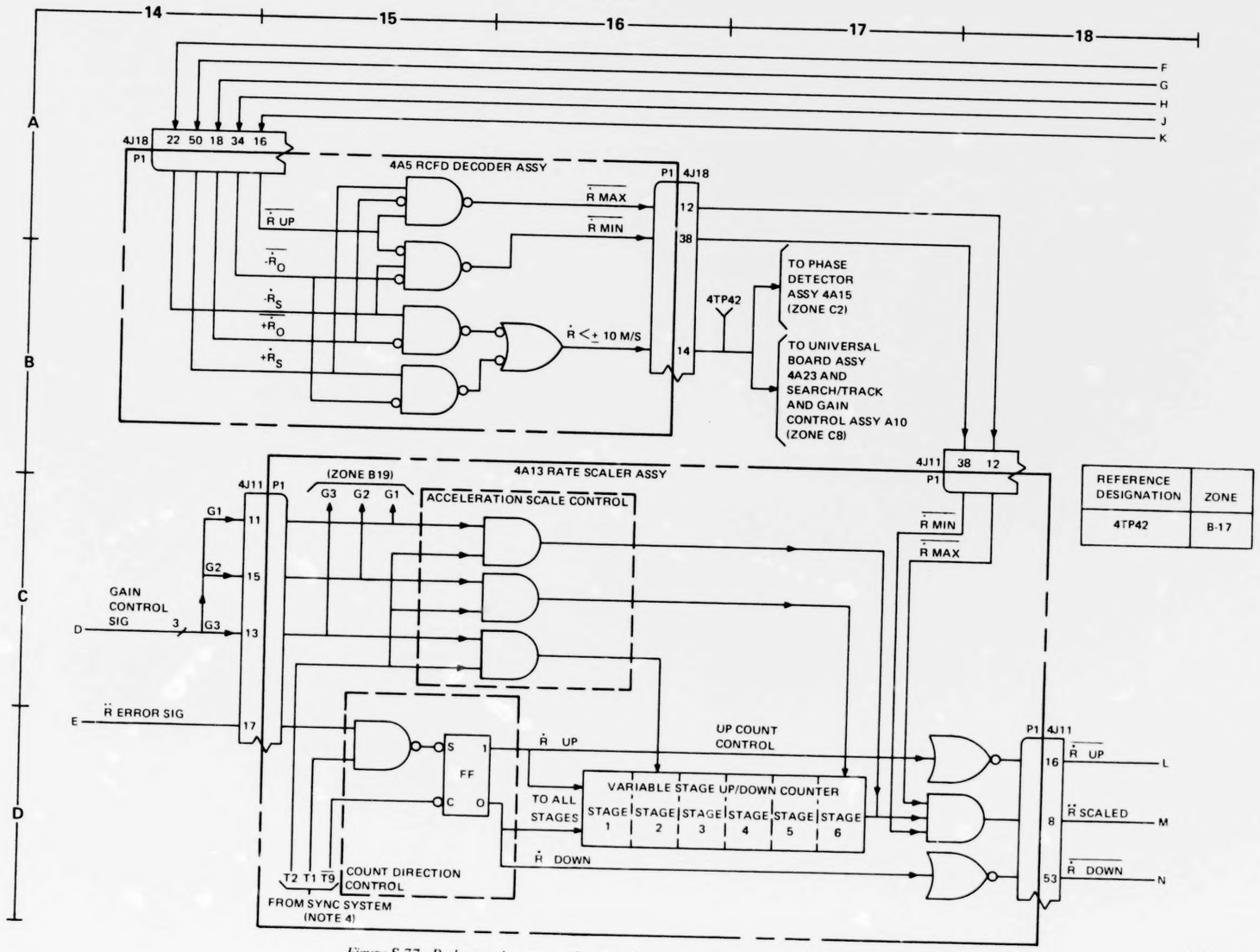

REFERENCE DESIGNATION	ZONE
4TP42	B-17

Figure S-77. Radar ranging system functional schematic diagram (sheet 3 of 6).

AR 905153

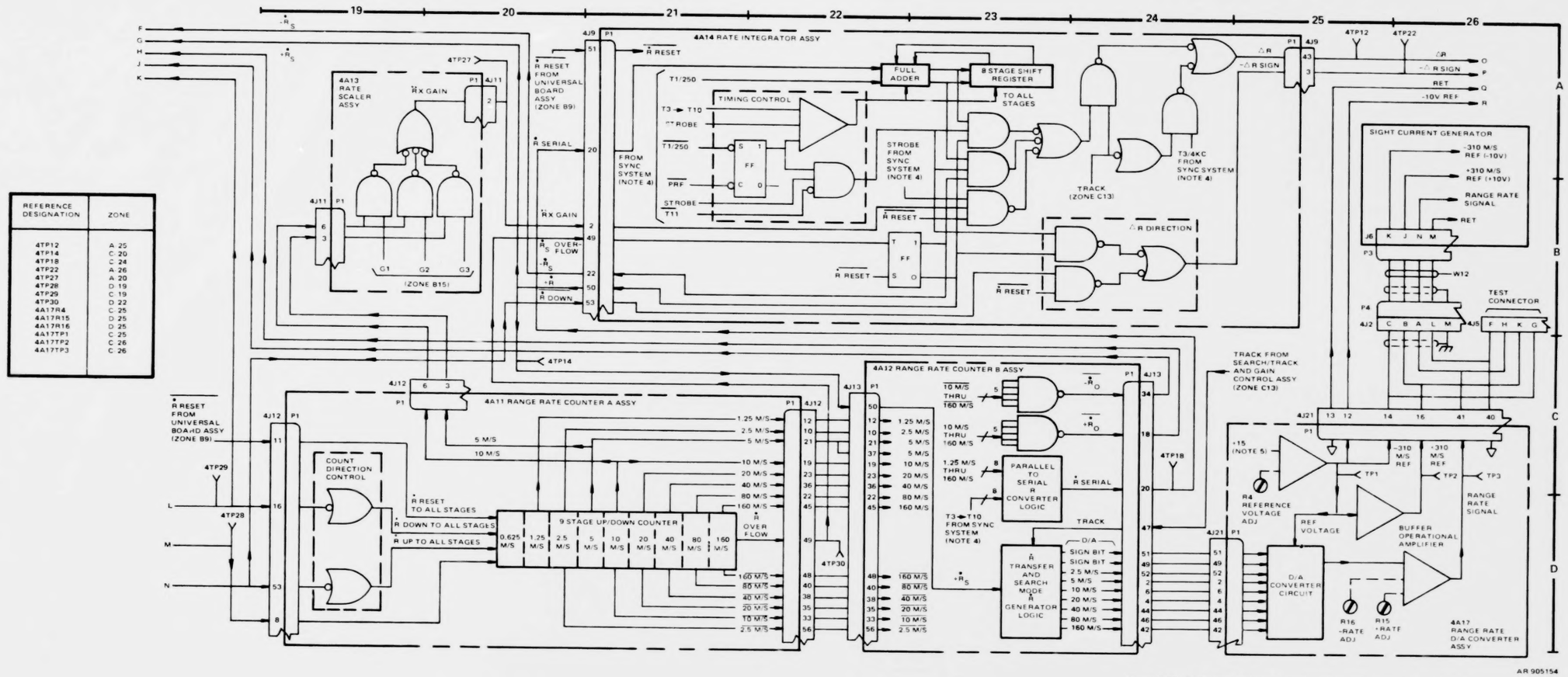

REFERENCE DESIGNATION	ZONE
4TP12	A 25
4TP14	C 20
4TP18	C 24
4TP22	A 26
4TP27	A 20
4TP28	D 19
4TP29	C 19
4TP30	D 22
4A17R4	C 25
4A17R15	D 25
4A17R16	D 25
4A17TP1	C 25
4A17TP2	C 26
4A17TP3	C 26

Figure 5-77. Radar ranging system functional schematic diagram (sheet 4 of 6).

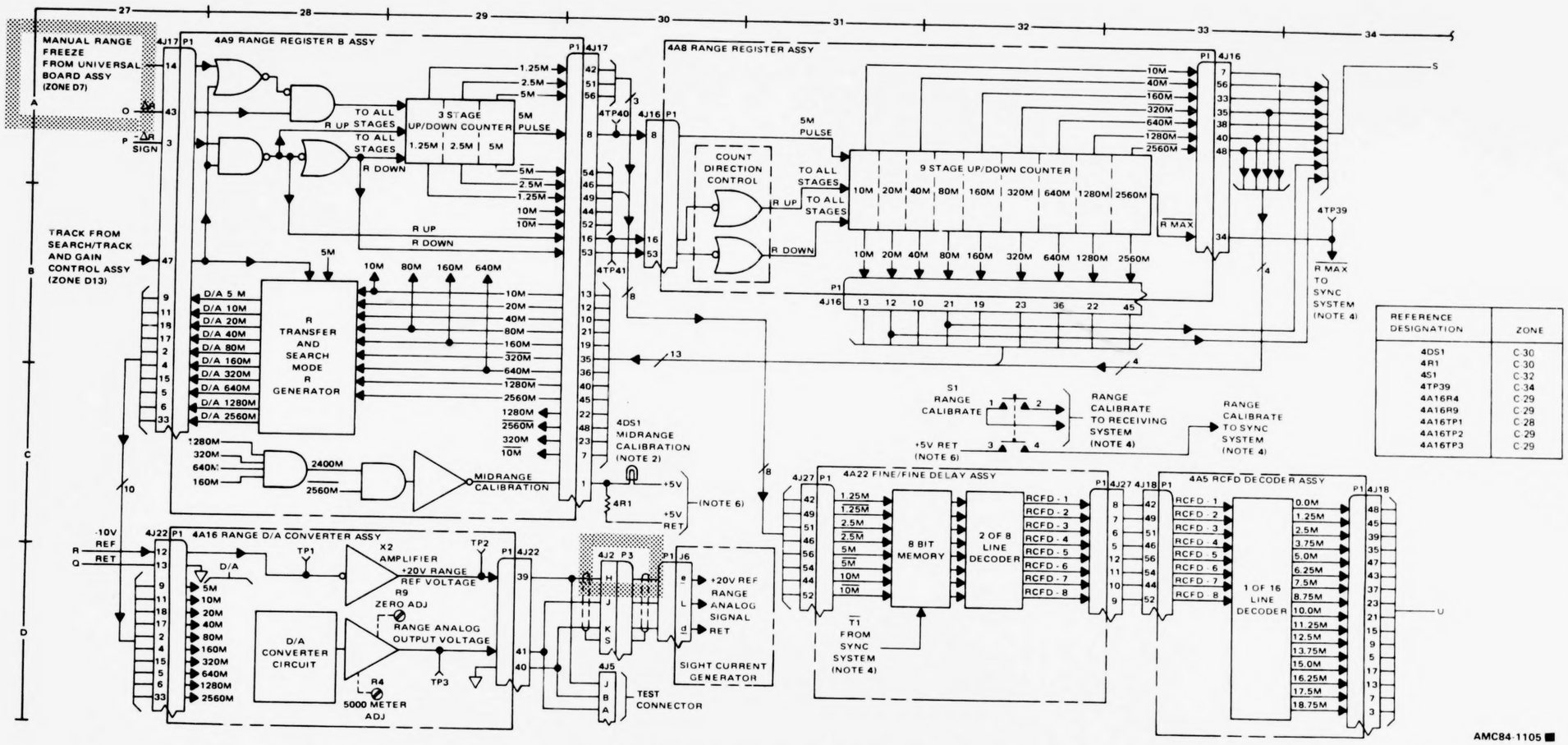

REFERENCE DESIGNATION	ZONE
4DS1	C-30
4R1	C-30
4S1	C-32
4TP39	C-34
4A16R4	C-29
4A16R9	C-29
4A16TP1	C-28
4A16TP2	C-29
4A16TP3	C-29

Figure S-77. Radar ranging system functional schematic diagram (sheet 5 of 6).

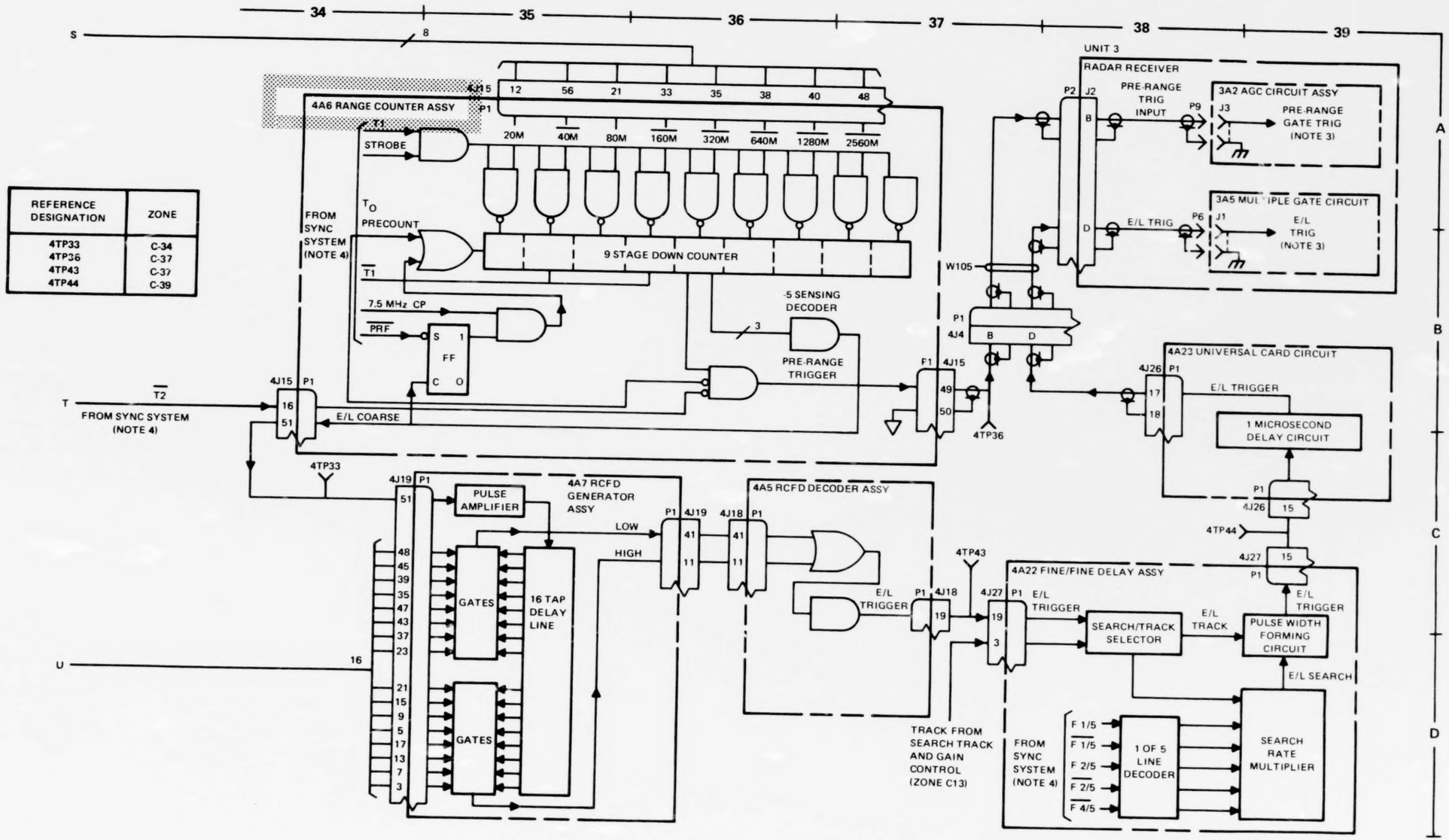

REFERENCE DESIGNATION	ZONE
4TP33	C-34
4TP36	C-37
4TP43	C-37
4TP44	C-39

Figure S-77. ***Radar ranging system functional schematic diagram (sheet 6 of 6).***

AMC84-1106

NOTES:

1. UNLESS OTHERWISE SPECIFIED RESISTANCE IS IN OHMS, CAPACITANCE IS IN MICROFARADS.
2. ALL DIODES IN4003 UNLESS OTHERWISE SPECIFIED.
3. K12 FUNCTIONS ARE NOT UTILIZED IN THIS APPLICATION.
4. POLARITY DATA AND CONVENTIONS.
   - A: MOTORS ARE VIEWED FROM THE BRAKE END.
   - B: POT AND TACH ARE VIEWED FROM SHAFT END.
   - C: ON AMPLIFIERS POSITIVE APPLIED TO PIN G GIVES OUTPUT ON PIN L.
   - D: TACH POLARITY AS MARKED WHEN DRIVEN CCW.
   - E: CW POT ROTATION GROUND NO. 1 TERMINAL.
   - F: CW AND CCW REFER TO POT, TACH, AND MOTORS.
   - G: RIGHT LEFT, UP AND DOWN REFER TO GUN.
5. ALL MOMENTARY SWITCHES ARE SHOWN IN THE UNACTUATED STATE UNLESS OTHERWISE SPECIFIED.
6. THIS IS A NORMALLY OPEN SWITCH WHICH IS ACTUATED DURING INSTALLATION AND RELEASED WHEN THE DRUM IS FULL.
7. ALL RELAY CONTACTS ARE SHOWN WITH THE COIL DE-ENERGIZED.
8. THE FOLLOWING SYMBOLS AND THE APPLICABLE PIN LETTER IS USED TO DEFINE TEST POINTS.
   - ▮ CONTROL PANEL
   - ⊖ DISTRIBUTION BOX
   - ○ SIGHT CURRENT GENERATOR
9. TAP IS MOVED TO 10.1 VOLTS AT OR BELOW 32° F.
10. FIVE POSITION ROTARY SWITCH WITH HI RATE CONTACTS CLOSED IN ALL HI RATE-BURST LIMIT POSITIONS.
11. POSITIVE LEAD ANGLE WHEN GUN IS ABOVE LINE OF SIGHT FOR INCOMING TARGETS.
12. LIGHT BLINKS WHEN SYSTEM VOLTAGE DROPS BELOW 22 VDC AND REMAINS ON WHEN SYSTEM VOLTAGE DROPS BELOW 20.5 VDC AND K2 DE-ENERGIZES PLACING SYSTEM INTO GROUND MODE.

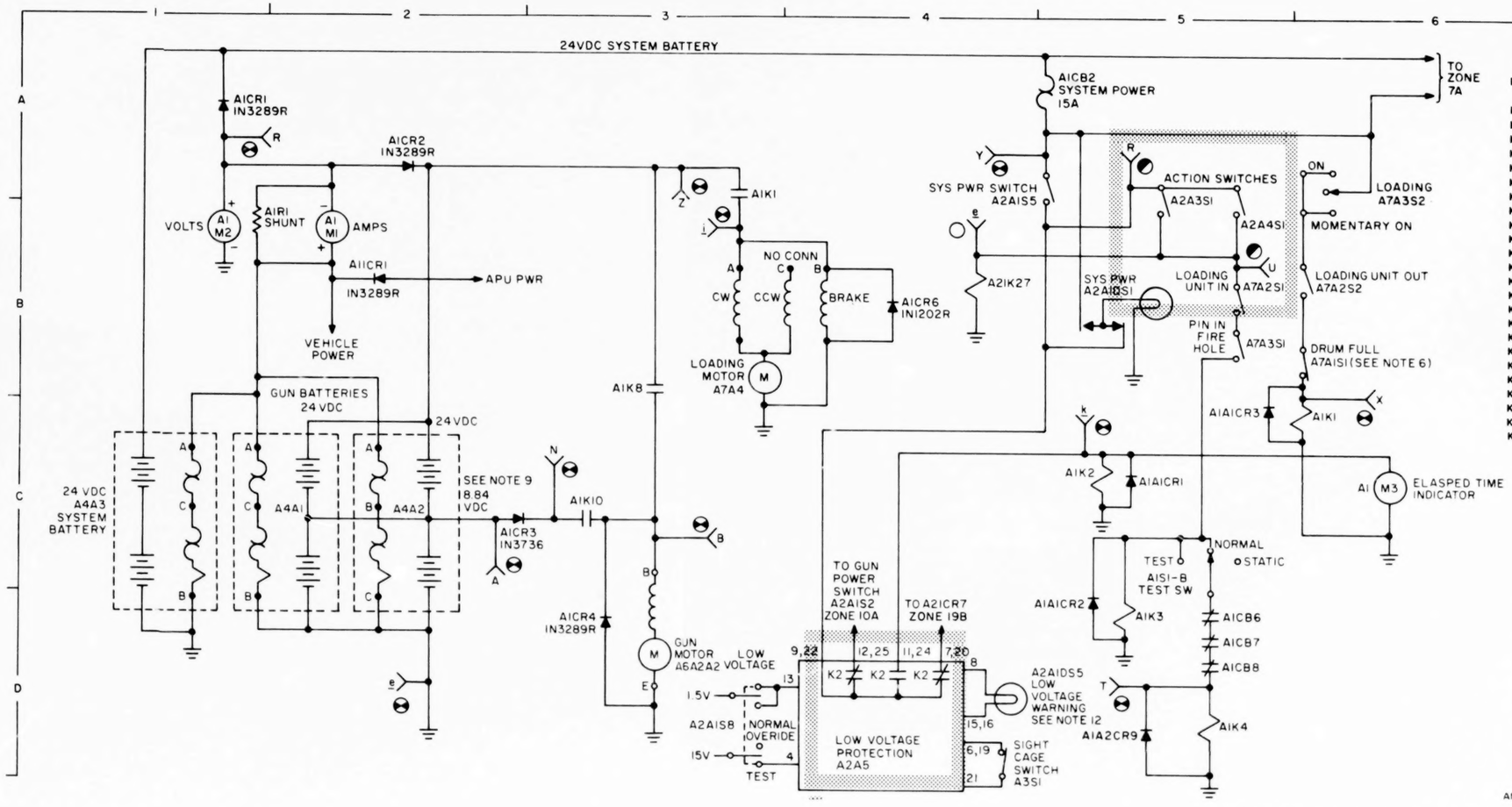

RELAY LIST

- K1 – LOADING
- K2 – SYSTEM POWER
- K3 – ACTION
- K4 – TURRET POWER
- K5 – TRIGGER
- K6 – FIRING VOLTS
- K7 – BURST LIMIT
- K8 – HI GUN MOTOR
- K9 – LO TIME DELAY
- K10 – LO GUN MOTOR
- K11 – CLEARING
- K12 – SEE NOTE 3
- K13 – LOWER LIMIT
- K14 – ACQ TIME DELAY
- K15 – RIGHT LIMIT
- K16 – LEFT LIMIT
- K17 – RADAR POWER
- K21 – ELEC CAGE OFF
- K22 – ACTION SW COMM
- K23 – 10 SEC TIME DELAY
- K24 – SIGHT CAGE
- K25 – EXTERNAL MODE
- K26 – MANUAL MODE
- K27 – READY TO FIRE

Figure S-78. M163A1 system electrical schematic diagram (sheet 1 of 5).

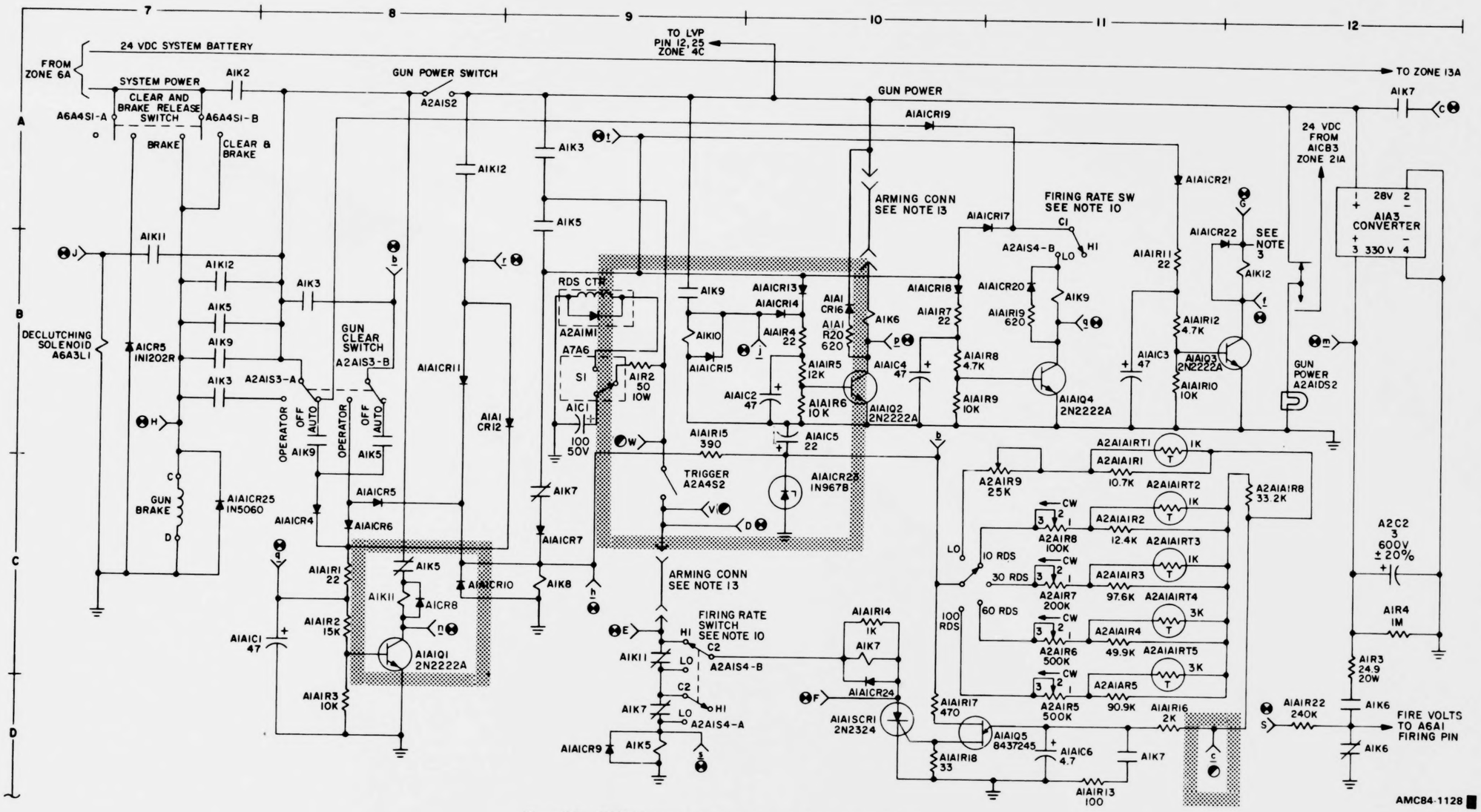

Figure S-78. M163A1 system electrical schematic diagram (sheet 2 of 5).

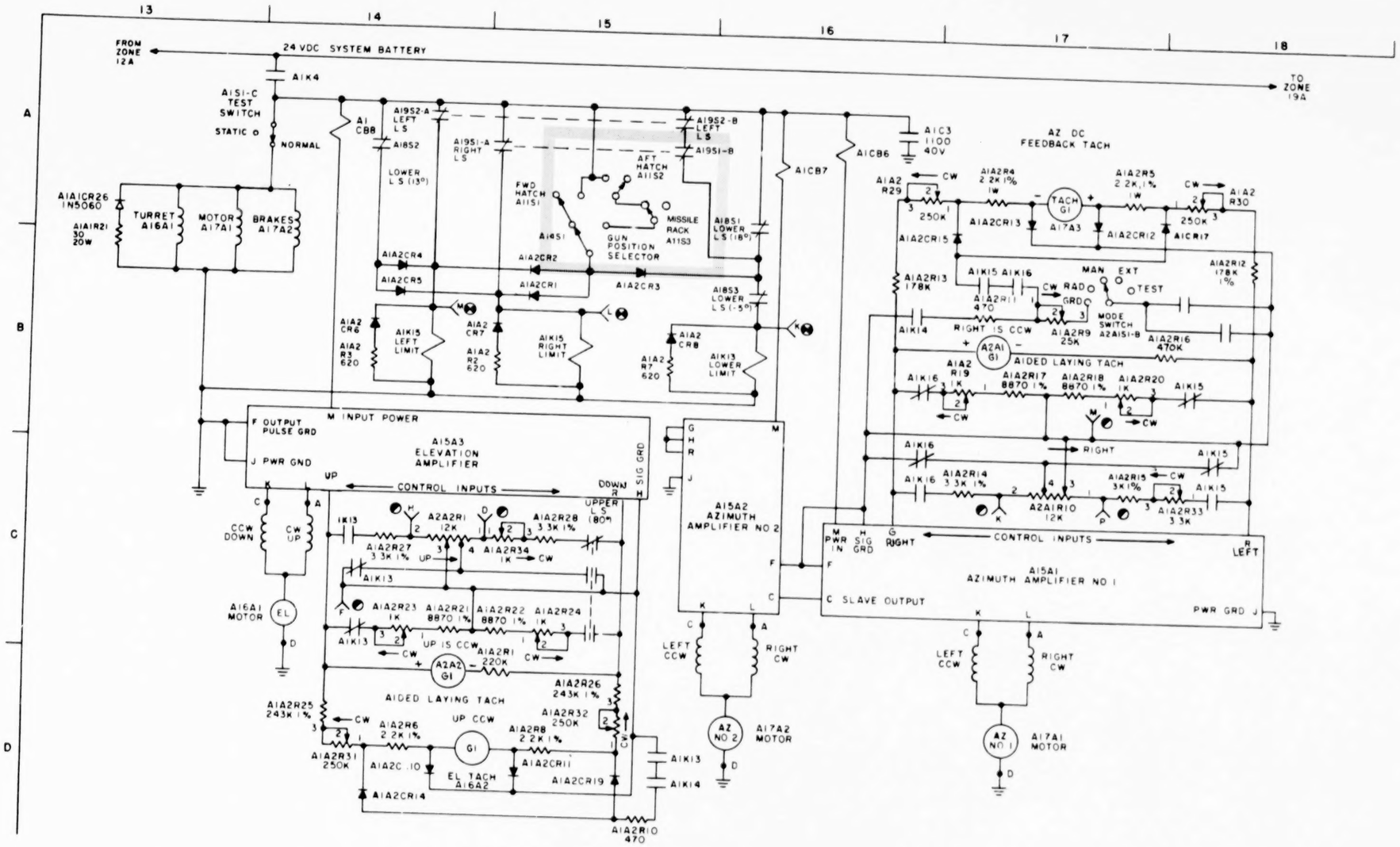

Figure S-78. M163A1 system electrical schematic diagram (sheet 3 of 5).

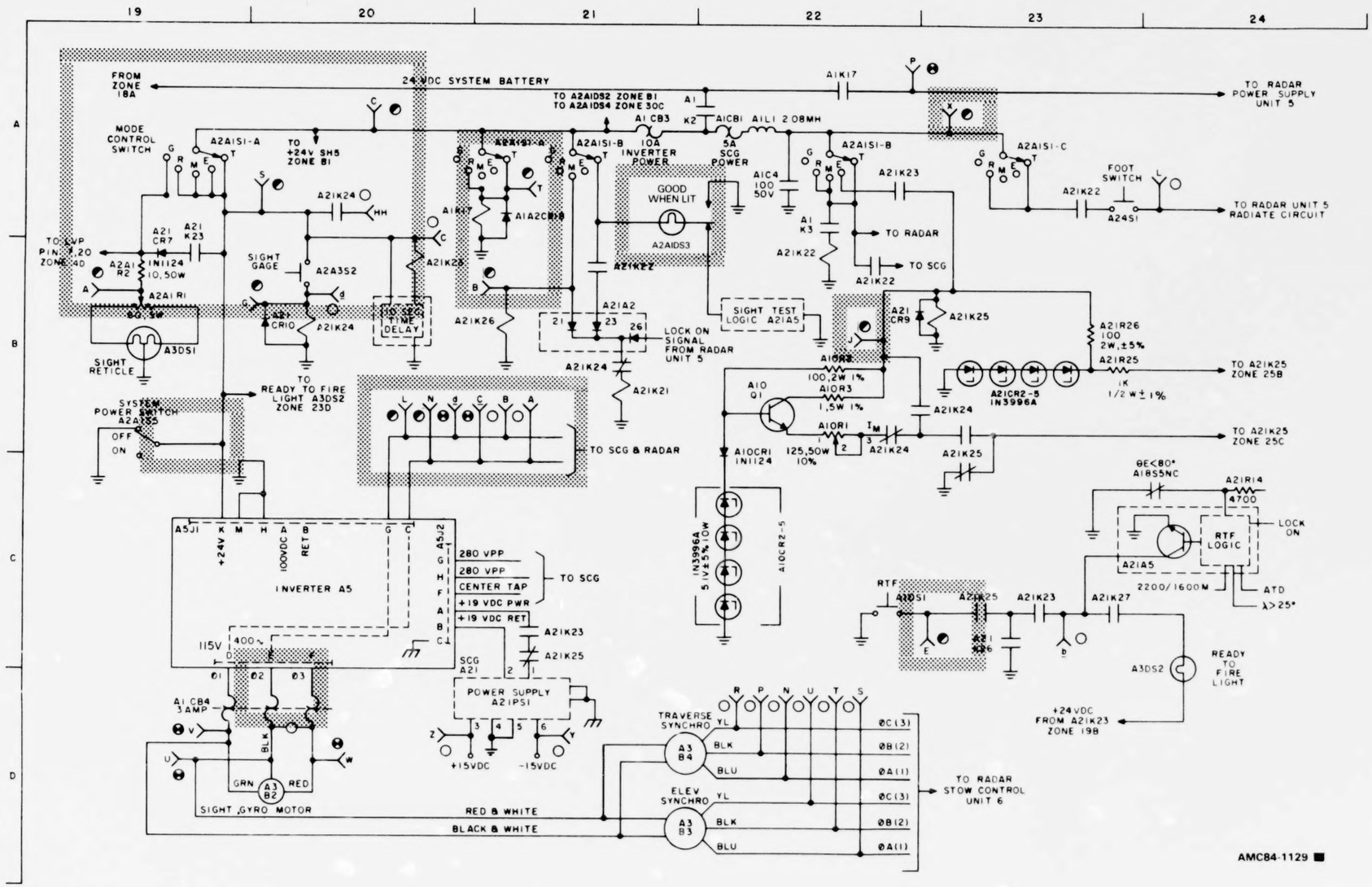
19
20
21
22
23
24
FROM ZONE 18A
24 VDC SYSTEM BATTERY
TO A2A1DS2 ZONE B1
TO A2A1DS4 ZONE 30C
A1K17
TO RADAR POWER SUPPLY UNIT 5
MODE CONTROL SWITCH
A2A1S1-A
TO +24V SH5 ZONE B1
A1 CB3 10A INVERTER POWER
A1CB1 A1L1 2.08MH
5A SCG POWER
A2A1S1-B
A2A1S1-C
A1C4 100 50V
A2A1S1-D
A2A1S1-E
A2A1S1-F
A2A1S1-G
A2A1S1-H
A2A1S1-J
A2A1S1-K
A2A1S1-L
A2A1S1-M
A2A1S1-N
A2A1S1-P
A2A1S1-R
A2A1S1-S
A2A1S1-T
A2A1S1-U
A2A1S1-V
A2A1S1-W
A2A1S1-X
A2A1S1-Y
A2A1S1-Z
A2A1S1-a
A2A1S1-b
A2A1S1-c
A2A1S1-d
A2A1S1-e
A2A1S1-f
A2A1S1-g
A2A1S1-h
A2A1S1-j
A2A1S1-k
A2A1S1-m
A2A1S1-n
A2A1S1-p
A2A1S1-r
A2A1S1-s
A2A1S1-t
A2A1S1-u
A2A1S1-v
A2A1S1-w
A2A1S1-x
A2A1S1-y
A2A1S1-z
A2A1S1-1
A2A1S1-2
A2A1S1-3
A2A1S1-4
A2A1S1-5
A2A1S1-6
A2A1S1-7
A2A1S1-8
A2A1S1-9
A2A1S1-10
A2A1S1-11
A2A1S1-12
A2A1S1-13
A2A1S1-14
A2A1S1-15
A2A1S1-16
A2A1S1-17
A2A1S1-18
A2A1S1-19
A2A1S1-20
A2A1S1-21
A2A1S1-22
A2A1S1-23
A2A1S1-24
A2A1S1-25
A2A1S1-26
A2A1S1-27
A2A1S1-28
A2A1S1-29
A2A1S1-30
A2A1S1-31
A2A1S1-32
A2A1S1-33
A2A1S1-34
A2A1S1-35
A2A1S1-36
A2A1S1-37
A2A1S1-38
A2A1S1-39
A2A1S1-40

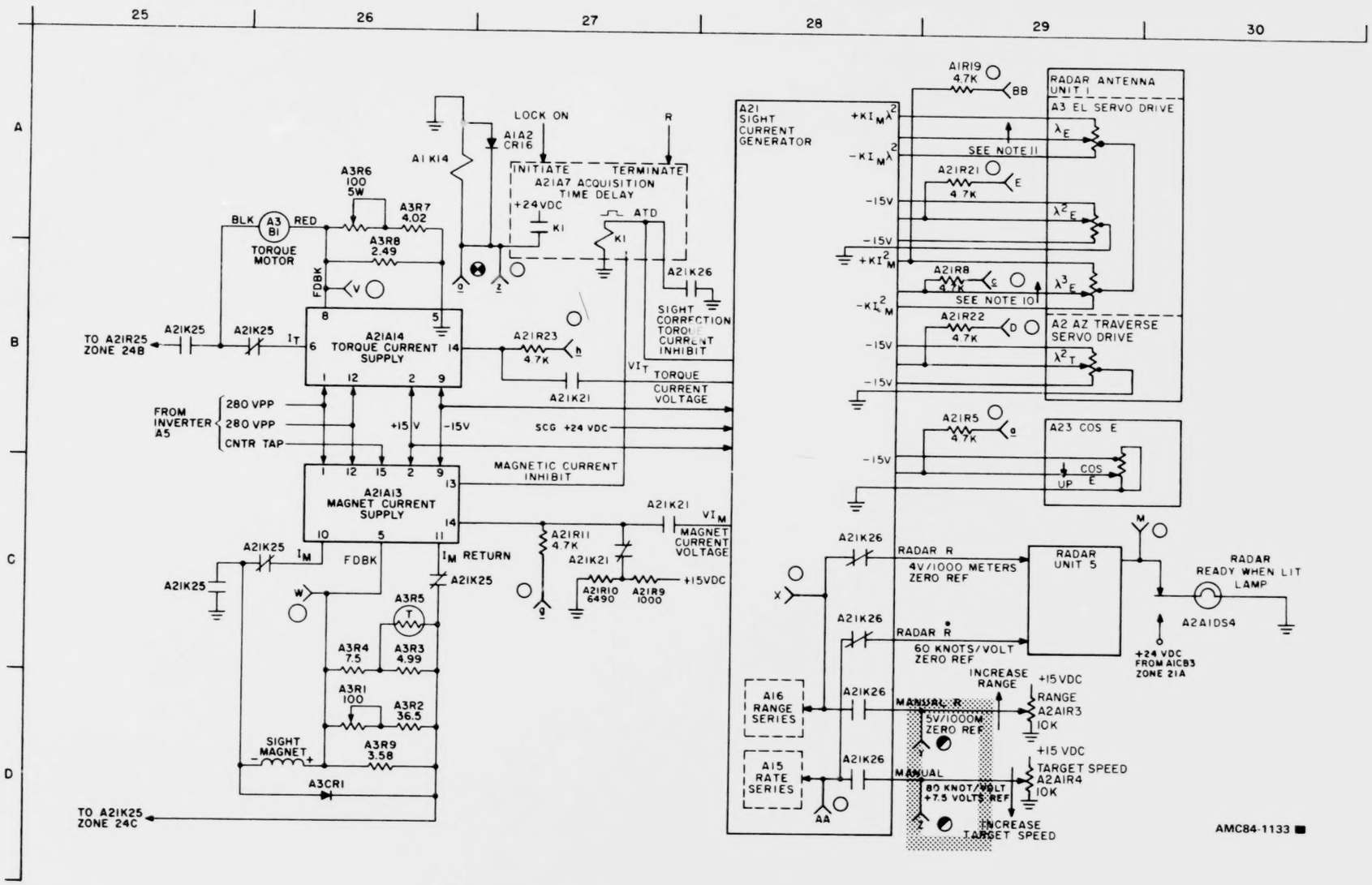

Figure S-78. M163A1 system electrical schematic diagram (sheet 5 of 5).

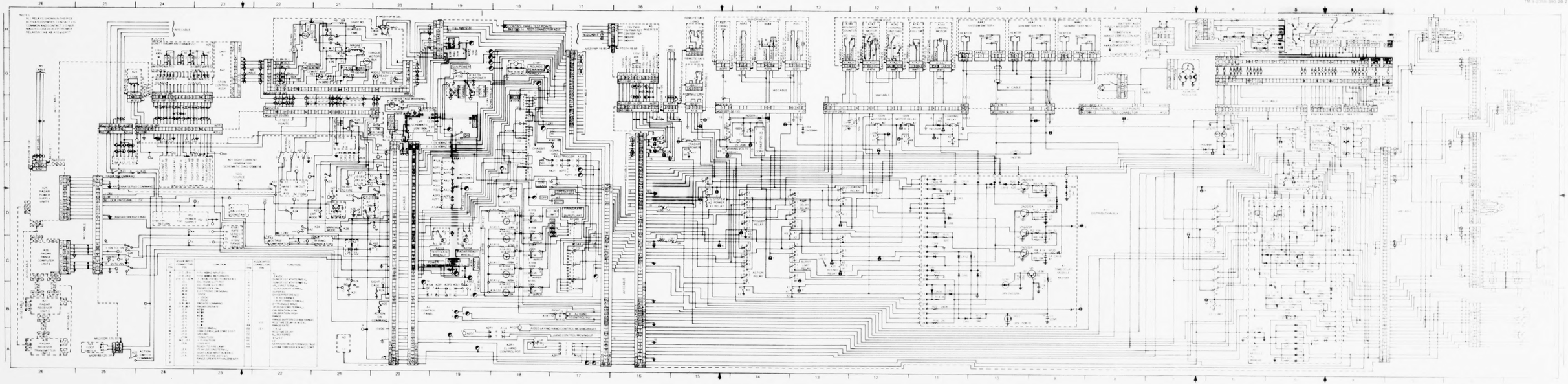

O

O

By Order of the Secretary of the Army:

BERNARD W. ROGERS
General, United States Army
Chief of Staff

Official:

PAUL T. SMITH
Major General, United States Army
The Adjutant General

DISTRIBUTION:

To be distributed in accordance with DA form 12-37 (qty rqr block no. 857) Organizational Maintenance requirements for for Gun, Air Defense Artillery, M163, M163A1

☆ U.S. GOVERNMENT PRINTING OFFICE : 1990 O - 277-811

RECOMMENDED CHANGES TO EQUIPMENT TECHNICAL MANUALS

SOMETHING WRONG WITH THIS MANUAL?

THEN . . . JOT DOWN THE DOPE ABOUT IT ON THIS FORM, TEAR IT OUT, FOLD IT AND DROP IT IN THE MAIL!

FROM: (YOUR UNIT'S COMPLETE ADDRESS)

Your mailing address.

DATE Date you fill out this form.

PUBLICATION NUMBER	DATE	TITLE
TM 9-XXXX-XXX-XX	Date of TM	Title of TM

BE EXACT . . . PIN-POINT WHERE IT IS

PAGE NO.	PARA-GRAPH	FIGURE NO.	TABLE NO.	IN THIS SPACE TELL WHAT IS WRONG AND WHAT SHOULD BE DONE ABOUT IT
3		2		Item 10. Change illustration. Reason: Tube end shown assembled on wrong side of lever cam.
109		51		Item 3. The NSN and P/N are not listed on the AMDF nor the MCRL. Request correct NSN and P/N be furnished.
2-8			2-1	Preventive Maintenance Checks and Services. Item 7 under "Items to be inspected" should be changed to read as follows:. Firing linkage and firing mechanism pawl.
12	1-6a			Since there are both 20- and 30- round magazines for this rifle, data on both should be listed

SAMPLE

TYPED NAME, GRADE OR TITLE, AND TELEPHONE NUMBER

SIGN HERE:

DA FORM 1 AUG 74 2028-2 (TEST)

P.S. - - IF YOUR OUTFIT WANTS TO KNOW ABOUT YOUR MANUAL "FIND," MAKE A CARBON COPY OF THIS AND GIVE IT TO YOUR HEADQUARTERS

AR 904501

TEAR ALONG DOTTED LINE

RECOMMENDED CHANGES TO EQUIPMENT TECHNICAL MANUALS

SOMETHING WRONG WITH THIS MANUAL?

THEN . . . JOT DOWN THE DOPE ABOUT IT ON THIS FORM, TEAR IT OUT, FOLD IT AND DROP IT IN THE MAIL!

FROM: (YOUR UNIT'S COMPLETE ADDRESS)

DATE

PUBLICATION NUMBER	DATE	TITLE
TM9-2350-300-20-2	31 MAR 77	Gun, ADA, M163A1

BE EXACT . . . PIN-POINT WHERE IT IS

PAGE NO.	PARA-GRAPH	FIGURE NO.	TABLE NO.

IN THIS SPACE TELL WHAT IS WRONG AND WHAT SHOULD BE DONE ABOUT IT.

TYPED NAME, GRADE OR TITLE, AND TELEPHONE NUMBER

SIGN HERE

TEAR ALONG DOTTED LINE

DA FORM 1 AUG 74 2028-2 (TEST)

P.S. -- IF YOUR OUTFIT WANTS TO KNOW ABOUT YOUR MANUAL "FIND," MAKE A CARBON COPY OF THIS AND GIVE IT TO YOUR HEADQUARTERS.

AR 908236

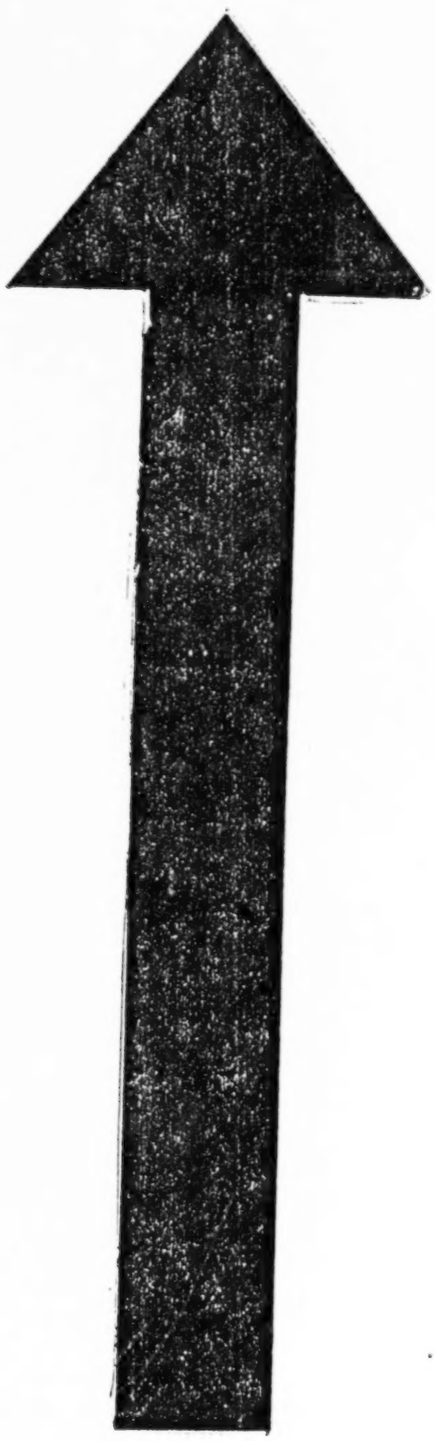

FILL IN YOUR UNIT'S ADDRESS

FOLD BACK

DEPARTMENT OF THE ARMY

OFFICIAL BUSINESS

Commander
US Army Armament Materiel Readiness Command
ATTN: DRSAR-MAS
Rock Island, IL 61201

TEAR ALONG DOTTED LINE

FOLD BACK

REVERSE OF DA FORM 2028-2 (TEST

AR 804603

FILL IN YOUR UNIT'S ADDRESS

FOLD BACK

DEPARTMENT OF THE ARMY

OFFICIAL BUSINESS

Commander
US Army Armament Materiel Readiness Command
ATTN: DRSAR-MAS
Rock Island, IL 61201

TEAR ALONG DOTTED LINE

FOLD BACK

REVERSE OF DA FORM 2028-2 (TEST

AR 004803

RECOMMENDED CHANGES TO EQUIPMENT TECHNICAL MANUALS

SOMETHING WRONG WITH THIS MANUAL?

THEN . . . JOT DOWN THE DOPE ABOUT IT ON THIS FORM, TEAR IT OUT, FOLD IT AND DROP IT IN THE MAIL!

FROM: (YOUR UNIT'S COMPLETE ADDRESS)

DATE

PUBLICATION NUMBER	DATE	TITLE
TM9-2350-300-20-2	31 MAR 77	Gun, ADA, M163A1

BE EXACT . . . PIN-POINT WHERE IT IS

PAGE NO.	PARA-GRAPH	FIGURE NO.	TABLE NO.

IN THIS SPACE TELL WHAT IS WRONG AND WHAT SHOULD BE DONE ABOUT IT:

TYPED NAME, GRADE OR TITLE, AND TELEPHONE NUMBER

SIGN HERE:

DA FORM 1 AUG 74 2028-2 (TEST)

P.S. -- IF YOUR OUTFIT WANTS TO KNOW ABOUT YOUR MANUAL "FIND," MAKE A CARBON COPY OF THIS AND GIVE IT TO YOUR HEADQUARTERS.

AR 908236

TEAR ALONG DOTTED LINE

FILL IN YOUR UNIT'S ADDRESS

FOLD BACK

DEPARTMENT OF THE ARMY

OFFICIAL BUSINESS

Commander
US Army Armament Materiel Readiness Command
ATTN: DRSAR-MAS
Rock Island, IL 61201

TEAR ALONG DOTTED LINE

FOLD BACK

REVERSE OF DA FORM 2028-2 (TEST

AR 904803

RECOMMENDED CHANGES TO EQUIPMENT TECHNICAL MANUALS

SOMETHING WRONG WITH THIS MANUAL?

THEN . . . JOT DOWN THE DOPE ABOUT IT ON THIS FORM, TEAR IT OUT, FOLD IT AND DROP IT IN THE MAIL!

FROM: (YOUR UNIT'S COMPLETE ADDRESS)

DATE

PUBLICATION NUMBER	DATE	TITLE
TM9-2350-300-20-2	31 MAR 77	Gun, ADA, M163A1

BE EXACT . . . PIN-POINT WHERE IT IS

PAGE NO.	PARA-GRAPH	FIGURE NO.	TABLE NO.	IN THIS SPACE TELL WHAT IS WRONG AND WHAT SHOULD BE DONE ABOUT IT:

TYPED NAME, GRADE OR TITLE, AND TELEPHONE NUMBER

SIGN HERE:

DA FORM 1 AUG 74 2028-2 (TEST)

P.S. - - IF YOUR OUTFIT WANTS TO KNOW ABOUT YOUR MANUAL "FIND," MAKE A CARBON COPY OF THIS AND GIVE IT TO YOUR HEADQUARTERS.

AR 908236

TEAR ALONG DOTTED LINE

FILL IN YOUR UNIT'S ADDRESS

FOLD BACK

DEPARTMENT OF THE ARMY

OFFICIAL BUSINESS

Commander
US Army Armament Materiel Readiness Command
ATTN: DRSAR-MAS
Rock Island, IL 61201

TEAR ALONG DOTTED LINE

FOLD BACK

REVERSE OF DA FORM 2028-2 (TEST

AR 904803

PIN : 028697-000